powersync™ catalogue 2018

Next Generation, Intelligently Controlled Luminaires

LUMASCAPE

Design. Create. Illuminate.

Q2 | LS9120 pg 10

Q4 | LS9140 pg 18

Q6 | LS9160 pg 26

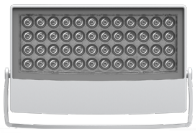

Q8 | LS9180 pg 34

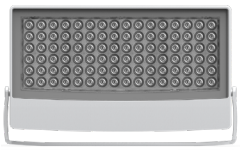

L1 | LS9010 pg 42

L3 | LS9030 pg 48

L5 | LS9050 pg 54

V1 | LS9015 pg 64

V2 | LS9016 pg 68

F6 | LS9260 pg 73

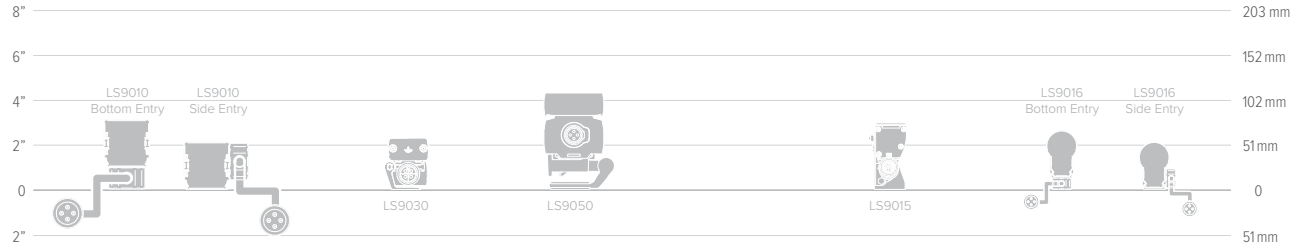

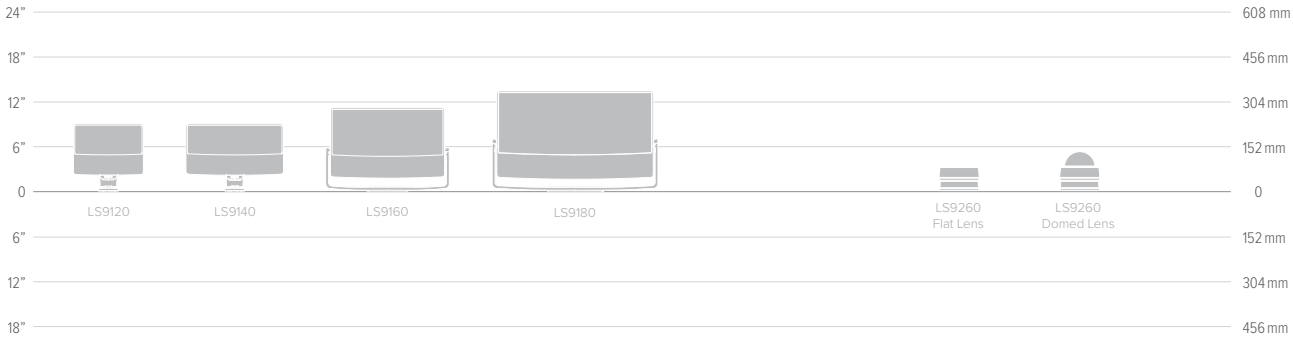

Product availability and configuration may vary for different markets. Please contact the factory or refer to www.lumascape.com for exact product specifications.

T5 | LS3150 pg 79

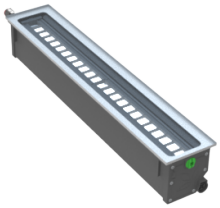

E4 | LS3040 pg 87

E8 | LS3080 pg 97

W3 | LS5030 pg 107

W7 | LS5070 pg 113

N1 | LS1010 pg 119

S1 | LS2010 pg 124

S2 | LS2020 pg 129

PS | LS6510 pg 134

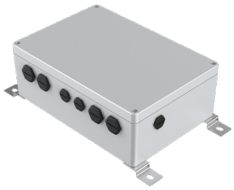

PS | LS6520 pg 136

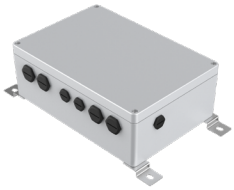

PS | LS6540 pg 138

PS | LS6550 pg 142

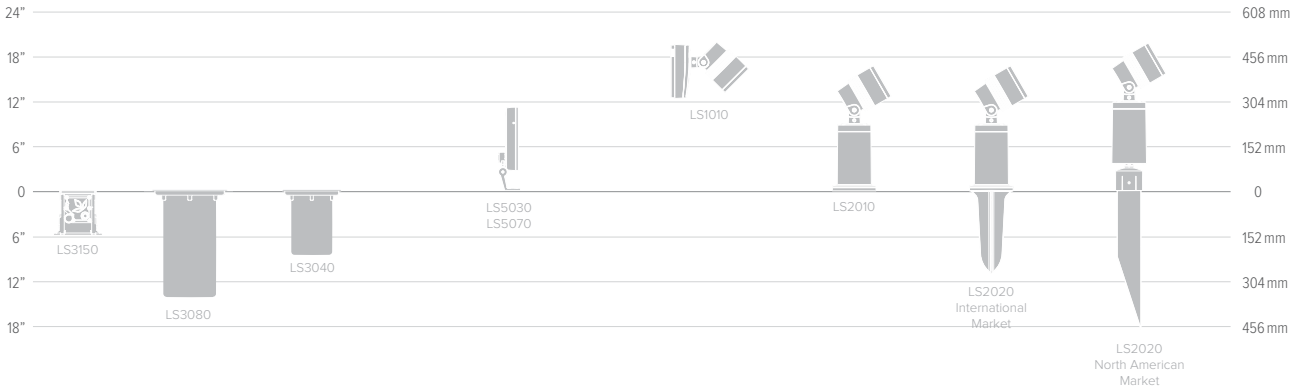

Product availability and configuration may vary for different markets. Please contact the factory or refer to www.lumascape.com for exact product specifications.

Table of Contents

Facade Spotlight

About Lumascape . . . 5
Product Functions & Features . . . 6
Lumascape PowerSync™ . . . 7

Facade Spotlight

Quadralux **Q2** - LS9120 . . . 10
Quadralux **Q4** - LS9140 . . . 18
Quadralux **Q6** - LS9160 . . . 26
Quadralux **Q8** - LS9180 . . . 34

Linear Facade Grazer

Linealux **L1** - LS9010 . . . 42
Linealux **L3** - LS9030 . . . 48
Linealux **L5** - LS9050 . . . 54

Linear Facade Outliner

Vestalux **V1** - LS9015 . . . 64
Vestalux **V2** - LS9016 . . . 68

Facade Marker

Faisca **F6** - LS9260 . . . 73

Inground

Terraluz **T5** - LS3150 . . . 79
Erden **E4** - LS3040 . . . 87
Erden **E8** - LS3080 . . . 97

Underwater

Woda **W3** - LS5030 . . . 107
Woda **W7** - LS5070 . . . 113

Surface Mount Spotlight

Nagu **N1** - LS1010 . . . 119
Stena **S1** - LS2010 . . . 124
Stena **S2** - LS2020 . . . 129

Power & Control

Pool & Spa Unit - LS6510 . . . 134
Wet Locations Power Unit - LS6520 . . . 136
Data Injector - LS6540 . . . 138
PowerSync™ LV DIN Rail - LS6550 . . . 142

Additional Information

PowerSync Accessories . . . 144
Wire Colours & Designations . . . 144
Shipping Weights & Dimensions . . . 145

Lumascape transforms architectural spaces with precision engineered lighting solutions.

For more than two decades, lighting designers and architects have come to rely on Lumascape's high-quality, innovative luminaires and controls to solve their toughest lighting challenges.

Today, we have grown to become an industry leader in innovative lighting solutions than enhance the architectural features of buildings and places throughtout the world. Each year we invest a significant amount of revenue into the research and development of new, innovative LED lighting technologies and the release of a range of products that meet the design needs of our project partners. Our dedicated global network of agents and distributors are specialists in transforming architectural spaces through addressing the unique customer and business needs in their respective markets.

Our high standards result in exceptional manufactured quality that withstands rigorous in-lineand post-build testing. All our products are endorsed by third-party testing and meet or exceed industry testing standards for energy conservation and lighting performance. Without compromising quality, we design lighting systems, controls, hardware and software that are highly sophisticated, yet easy for customers to specify, install and maintain. Our technology based solutions are designed to address the desire for light-inspired experiences through architecture.

Design

Lumascape provides full detailed design and engineering customisation services to ensure an optimal lighting solution is available to clients.

Our design centre has over 20 skilled engineers including electrical, mechanical and electronics specialists (firmware, software and hardware) scientists and product designers.

The design centre features a world class lighting laboratory including an 18m Goniometer, several spheres, full thermal suite including thermal camera, walk in still air room, several environmental test chambers, accelerated corrosion testing, UV testing and much more.

Build

Our manufacturing facility is fully owned and operated by Lumascape.

Capabilities include robotic silicone sealing, electronics assembly and a surface treatment plant.

Lumascape's high standards result in exceptional quality that withstands rigorous in-line and post build tests.

Deploy

All products are 100% tested over a 24-48 hour period in thermal chambers where temperatures cycle between -10°C to 50°C.

Our products meet or exceed industry testing standards for energy conservation and lighting performance standards.

Lumascape offers full technical support on all projects to ensure a seamless integration into the project for the best possible outcome for all stakeholders.

We have completed many successful projects around the world where Lumascape have been involved in the entire system design including fixtures, control system and user.

Symbol Index

powersync™

High speed digital communication technology, allowing addressing and granular control of every luminaire using a single cable. Supports 0-10V, DMX/RDM and phase control with flicker-free dimming to 0.1%. See next page for details.

cooldrive™

Temperature control technology actively manages light engine and driver temperatures within safe limits - no matter the conditions.

easyglow™

A visual comfort technology, reducing the contrast ratio between the lit and unlit surfaces of the luminaire, dramatically reducing the perception of glare.

humantouch™

This technology limits surface temperatures to safe limits to be touched.

gripglass™

Textured treatment of OptiClear™ glass for inground / ingrade luminaires to minimise the risk of slipping.

opticlear™

A glass lens with very high optical purity and high load strength.

microantileach™

Proprietary sealing process eliminating moisture ingress through the wire entry.

powersync™

Intelligent electronics for LED luminaires that deliver efficient performance and control

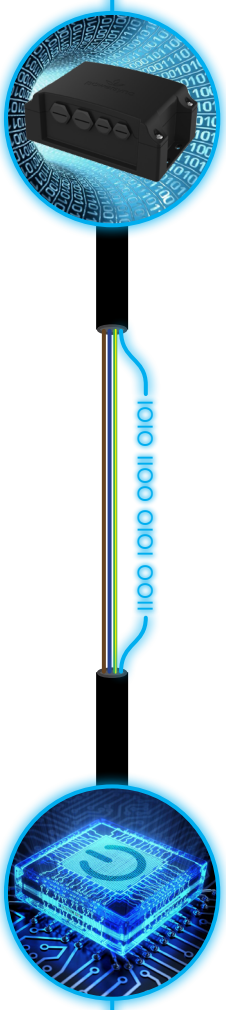

What is PowerSync™

- Supports a growing number of industry standard control protocols, including DMX / RDM and 0-10 V
- 2,000 Hz flicker free dimming to 0.1%
- Incorporates data and power into a single cable, transmitting data via a single cable
- Controls up to 45 PowerSync™ luminaires in a single 150m (492ft) circuit
- Scalable from small applications to complex lighting schemes
- Easy modular installation
- Provides remote monitoring and maintenance

Quadralux Q2 & Q4

Semanggi Overpass
Jakarta, Indonesia

The Quadralux Q2 is a small architectural grade spotlight that combines technology and performance in a modern form factor. Available in white, colour changing and tunable white light engines, the Quadralux Q4 is packed with features including EasyGlow™ visual comfort and CoolDrive™ thermal management technologies. PowerSync™ allows for highly granular digital control via common protocols. Unique and flexible mounting and glare control accessories enable installation in multiple orientations. Lighting professionals now have greater creative flexibility with the choice of designer* and standard LED options.

*Reduces colour-over-angle separation, fewer striations in the beam and shorter blending distances.

Performance

Static White & Colour	Lumen Output (lm)	Efficacy (lm/W)	Peak Intensity (cd)
2,700 K (80 CRI)	3,016	89.2	59,251
3,000 K (80 CRI)	3,069	91.1	60,498
3,500 K (80 CRI)	3,342	98.9	65,876
4,000 K (80 CRI)	3,406	100.2	69,930
5,000 K (70 CRI)	3,617	107.0	72,174
Red	1,009	22.4	28,499
Green	2,170	39.9	61,271
Blue	885	15.5	24,996

Static white lumen output values are based on a 10° standard lens.

Dynamic Colour	Lumen Output (lm)	Efficacy (lm/W)	Peak Intensity (cd)
RGBA	1,625	51.7	52,189
RGBW	1,846	59.0	52,119
RGB(1)	-	-	-

Dynamic colour lumen output values based on an 8° designer lens.
(1) RGB available on request.

Tunable White	Lumen Output (lm)	Efficacy (lm/W)	Peak Intensity (cd)
2,700 K - 6,500 K	-	-	-

powersync™ easyglow™ cooldrive™

Performance

Beam Angles	Light Engine	Series	Beam Angles
	Static White & Single Colour	Standard	10°, 15°, 30°, 45°, 40° x 10°, 60° x 10°, 40° x 20°, 60° x 20°
		Designer (1)	6°, 15°, 30°, 45°, 60°, 40° x 10°, 60° x 10°, 40° x 20°, 60° x 20°
	Dynamic Colour	Designer (1)	6°, 15°, 30°, 45°, 60°, 40° x 10°, 60° x 10°, 40° x 20°, 60° x 20°
	Tunable White	Designer (1)	6°, 15°, 30°, 45°, 60°, 40° x 10°, 60° x 10°, 40° x 20°, 60° x 20°

(1) Significantly reduces colour-over-angle separation, fewer striations in the beam and shorter blending distances.

Electrical

LED Power	30W
Consumption	≤35W maximum
Lifetime (L70)	>60,000hrs (B10, L70, TM21)
Input Voltage	120-277V, 50/60Hz
Thermal Management	CoolDrive™ onboard thermal monitoring and control.

Control

Interface	Lumascape PowerSync™
Protocols	DMX/RDM, Artnet, PWM(1), 0-10V (sink or source)(1) Some protocols require additional hardware. For details and for other available protocols contact factory. 1. Not available for Colour Changing
PWM Frequency	2,000Hz flicker free dimming to 0.1%
Systems	Range of third-party controllers

Physical

Housing	Die cast marine grade aluminum, tempered glass lens, isolated stainless steel fasteners, constant torque adjustable mounting bracket (lockable and reversible)
Finish	Superior 9-step powder-coating process, including marine epoxy undercoat and polyester top coat.
Installation	Surface-mounted with galvanic isolator and safety cable attachment point
Adjustable	Constant torque adjustable mounting bracket, lockable and reversible
Ambient Operating Temperature	-40°C to 50°C (-40°F to 122°F)
Surface Temperature	≤59°C (138°F)
Weight	2.0kg (4.5lbs)
Effective Projected Area	557cm^2 (0.6ft^2)

Certification & Compliance

IP Rating	IP66 / IP67
IK Rating	IK8
Vibration Resistance	3G Rating (ANSI C136.31) Contact factory for mounting details.
Environment	Dry, Damp, Wet locations
Certifications	ETL, CE, RCM, CCC

Luminaire Dimensions

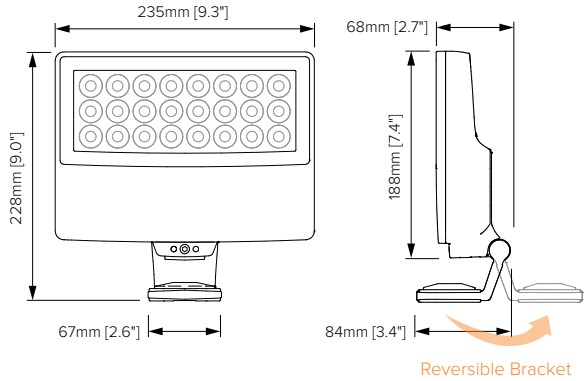

Bracket Dimensions

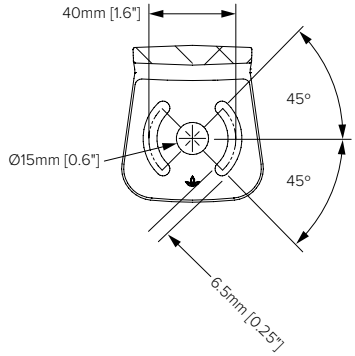

Standard Horizontal Mounting

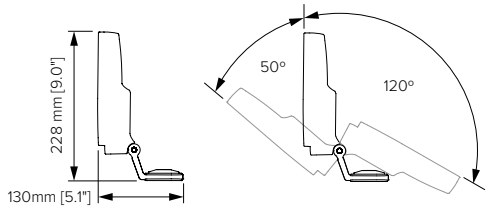

Standard Vertical Mounting

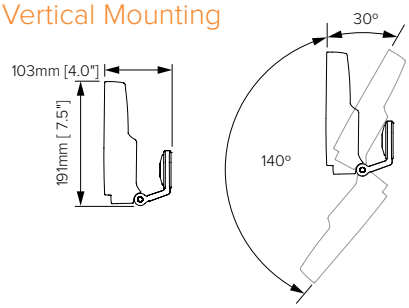

Reverse Horizontal Mounting

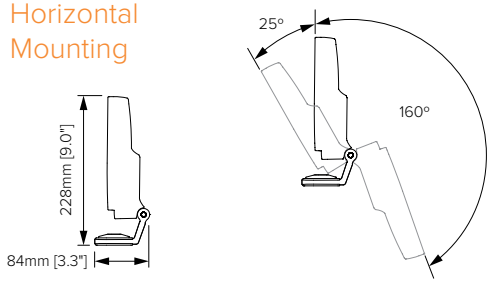

Reverse Vertical Mounting

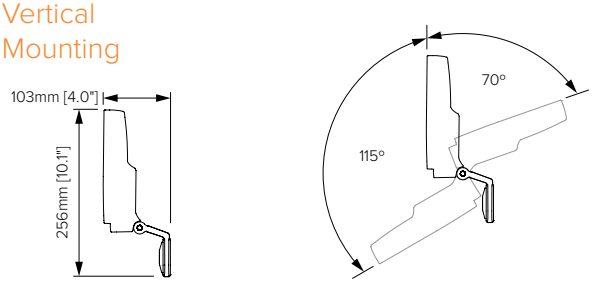

LS9120	30								

Series	Code
Designer	D
Standard	S

Static White & Colour	Code
2,700 K (80 CRI)	827
3,000 K (80 CRI)	830
3,500 K (80 CRI)	835
4,000 K (80 CRI)	840
5,000 K (70 CRI)	750
Red	RED
Green	GRN
Blue	BLU

Standard	Designer	Code
N/A	6°	VN
10°	N/A	NR
15°	15°	NM
30°	30°	ME
45°	45°	WD
N/A	60°	WF
40° x 10°	40° x 10°	NH
10° x 40°	10° x 40°	NV
60° x 10°	60° x 10°	LH
10° x 60°	10° x 60°	LV
40° x 20°	40° x 20°	MH
20° x 40°	20° x 40°	MV
60° x 20°	60° x 20°	WH
20° x 60°	20° x 60°	WV

Dynamic Colour	Code
RGBA	4CA
RGBW	4CW
RGB	RGB[1]

(1) Available on request

Designer	Code
6°	VN
15°	NM
30°	ME
45°	WD
60°	WF
40° x 10°	NH
10° x 40°	NV
60° x 10°	LH
10° x 60°	LV
40° x 20°	MH
20° x 40°	MV
60° x 20°	WH
20° x 60°	WV

Tunable White	Code
2,700 K - 6,500 K	2WT

Designer	Code
6°	VN
15°	NM
30°	ME
45°	WD
60°	WF
40° x 10°	NH
10° x 40°	NV
60° x 10°	LH
10° x 60°	LV
40° x 20°	MH
20° x 40°	MV
60° x 20°	WH
20° x 60°	WV

Connection Type	Code
Flexible cable, single entry, for hard wired installations	84
Flexible cable, single entry, for connectorised installations	77[1]

(1) Not available for North American market.
For other cable entry options contact factory.

Input Voltage	Code
110-240V, 50/60Hz	01[1]
120-277V, 50/60Hz	09[2]

(1) International market
(2) North American market

Control	Code
Non-Dim	ND[1]
Powersync™	PS[2]

(1) For single colour, non-dimming applications only.
(2) Required for all dimming and colour changing applications. LS6540 Data Injector required - order separately

Finish	Code
Black	BL
Anthracite Grey	AG
Basalt Grey	BT
Anodic Silver	SL
White	WT
Dark Bronze	DB
Latte	LT
Dark Aluminum	DA
Custom RAL	CC[1]

(1) Please provide RAL colour.

Cable Length	Code
1.8m (6')	006

For custom cable length contact factory.

Beam Orientations

Beam Orientation for the "LH", "NH", "MH" and "WH" optical system

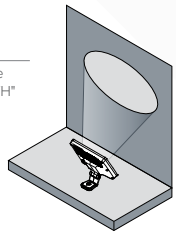

Beam Orientations

Beam Orientation for the "LV", "NV", "MV" and "WV" optical system

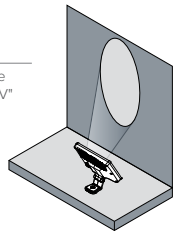

Shielding & Glare Control

A variety of shielding and glare control options are available for the Quadralux Q2 Series. The drawing below depicts the glare control accessories available.

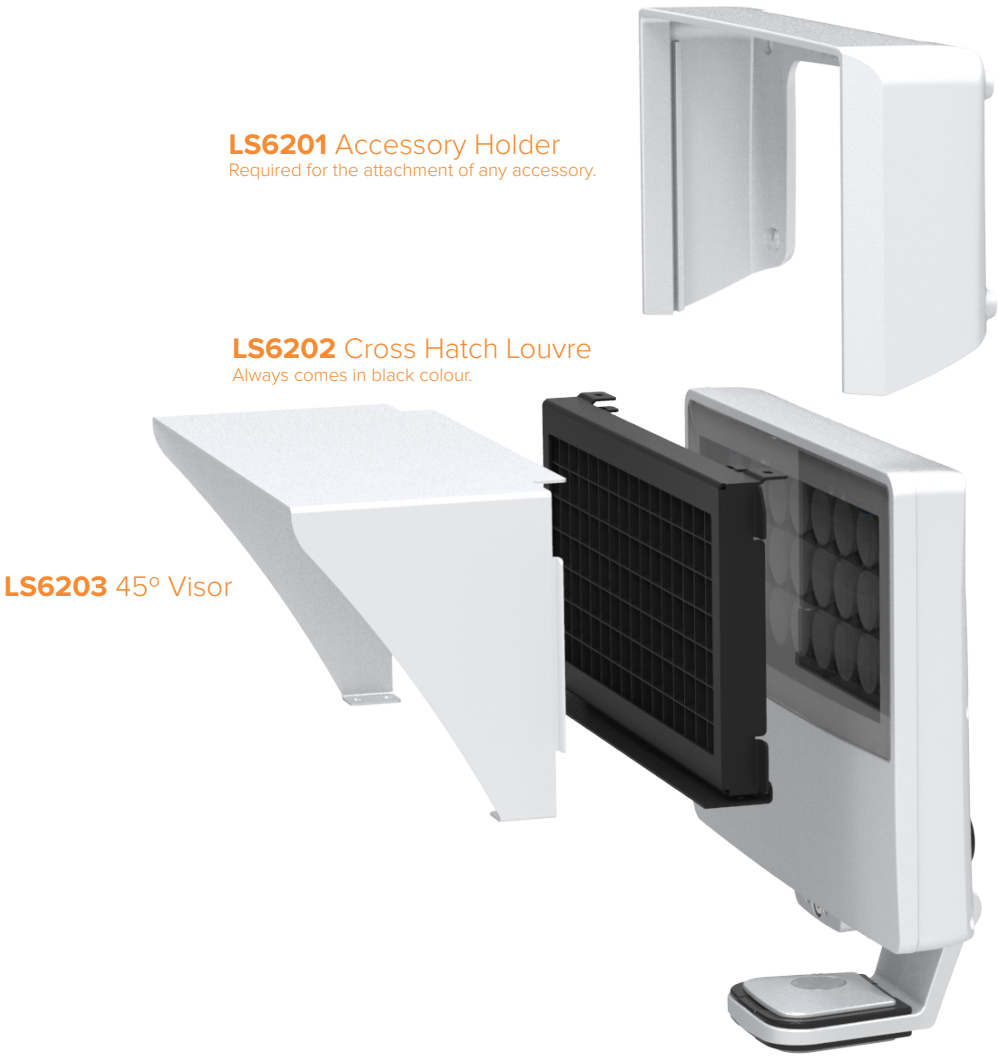

Louvre Length	Code
Accessory Holder	LS6201[1]
45° Visor	LS6203
Custom Visor (Contact factory)	LS6204[2]

(1) Required for the attachment of any accessory.
(2) Contact factory for details.

Finish	Code
Black	BL
Anthracite Grey	AG
Basalt Grey	BT
Anodic Silver	SL
White	WT
Dark Bronze	DB
Latte	LT
Dark Aluminum	DA
Custom RAL	CC[1]

(1) Please provide RAL colour.

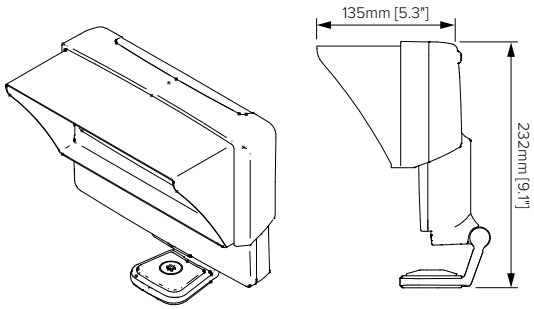

LS6306 | LS6307 Tenon Adaptor (2 3/8" x 4.0" and 3 1/2" x 6.0" options)

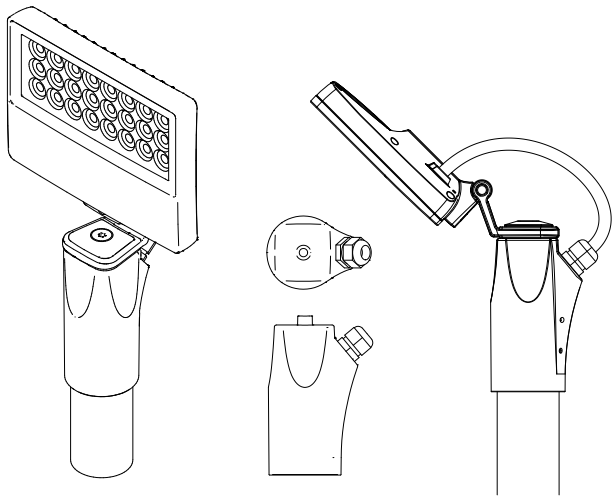

2 3/8" x 4" Option Shown

LS6302 | LS6303 | LS6304 | LS6305 Pole Clamp (3.0", 4.0",4.5", 5.0" options)

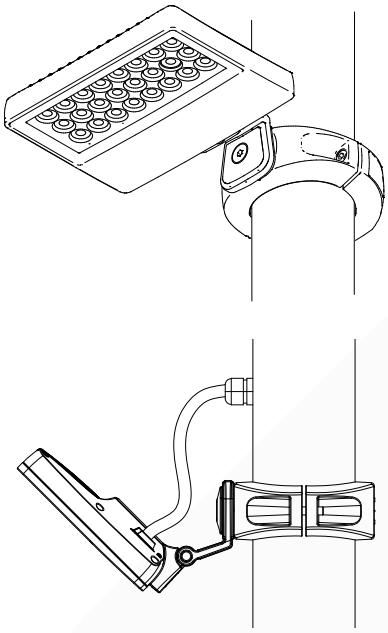

4.5" Option Shown

LS6301 4.0" Junction Box Adapter (North American Market)
LS6301 Surface Mounting Kit (International Market)

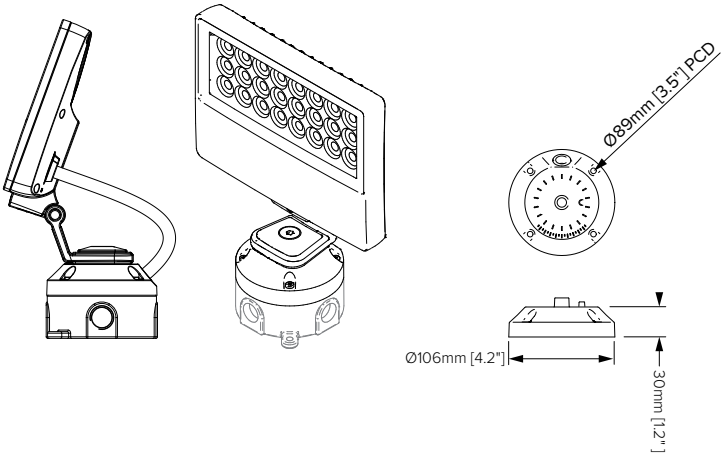

Mounting Accessories	Code
4.0" Junction Box Adapter / Surface Mounting Kit	LS6301
3.0" Pole Clamp	LS6302
4.0" Pole Clamp	LS6303
4.5" Pole Clamp	LS6304
5.0" Pole Clamp	LS6305
2 3/8" x 4.0" Tenon Adapter	LS6306
3.5" x 6.0" Tenon Adapter	LS6307

Finish	Code
Black	BL
Anthracite Grey	AG
Basalt Grey	BT
Anodic Silver	SL
White	WT
Dark Bronze	DB
Latte	LT
Dark Aluminum	DA
Custom RAL	CC(1)

(1) Please provide RAL colour.

Network Topology - PowerSync™ Dimmable

PowerSync™ Topology 1 - Single Trunk Cable

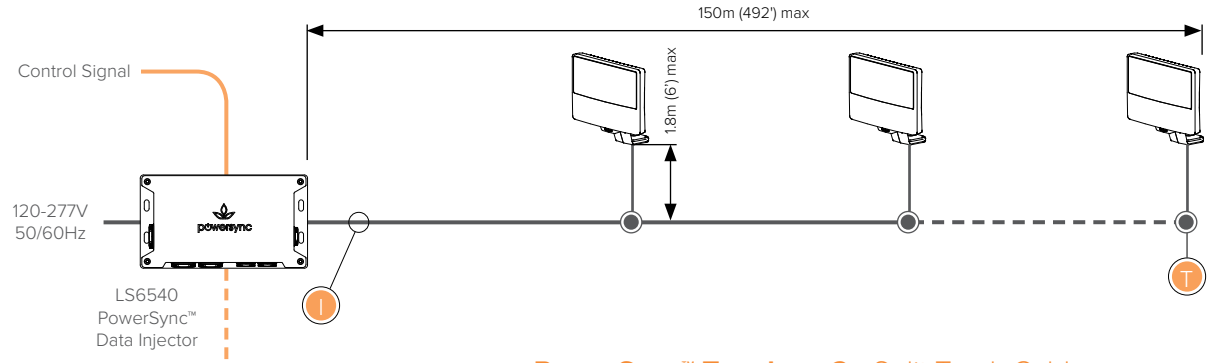

PowerSync™ Topology 2 - Split Trunk Cable

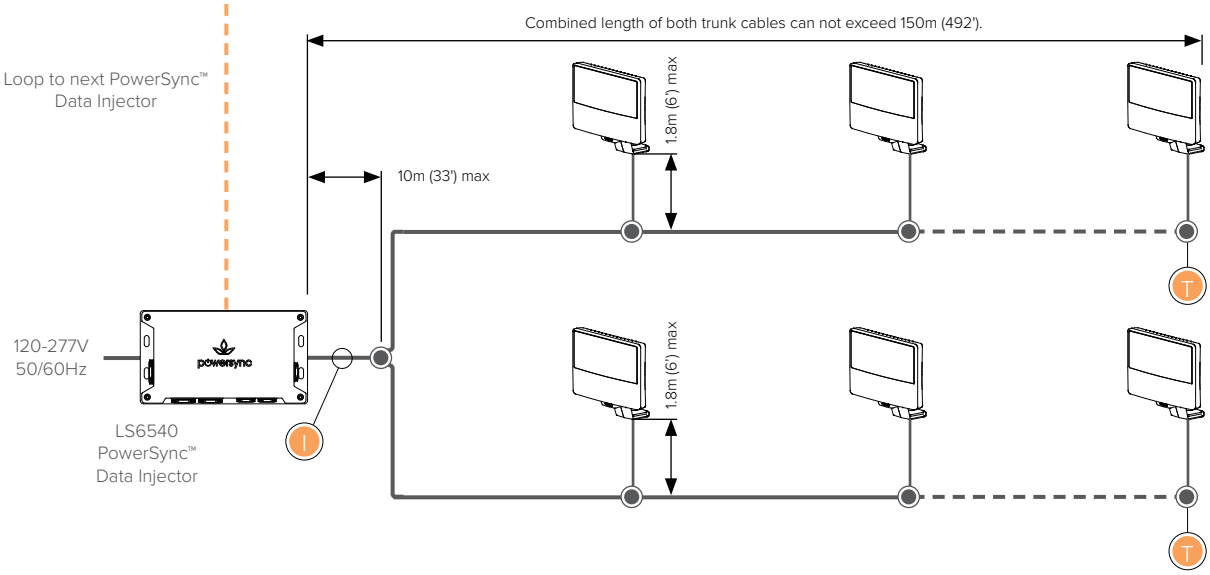

Up to 45 luminaires per run under the following conditions:

- Max total cable run length 150m (492') in up to two trunk cables
- Refer to 'Maximum Circuit Load' table for circuit limitations
- Always observe local electrical codes for branch circuit current limitations
- For run length in excess of 30m (100') use a wire size not lower than 14 AWG

Terminator

Use PowerSync™ terminator, supplied with leader cable to terminate last luminaire in chain.

Maximum Current

Through cables and connectors, using Lumascape supplied jumper and leader cables ≤16.0A.

Connection Type

Circuits can be configured as either connectorised or hardwired. For details consult installation instructions and comply with local electrical codes.

Maximum Circuit Load

Maximum Number of Interconnected Fixtures		
Voltage	12.8A	16A
120V	41	45
240V	45	45
277V	45	45

Refer to PowerSync™ installation manual for maximum distance information and typology options.

For non-continuous runs contact factory for details.

NOTE: The above diagrams are intended to show electrical pathways between luminaires and ancillary device. These diagrams are not intended to show type or colour of cord / wire, luminaire input voltage rating, wire gauge or approved use of the cord / wire supplied with luminaires.

Network Topology - Non-Dimmable

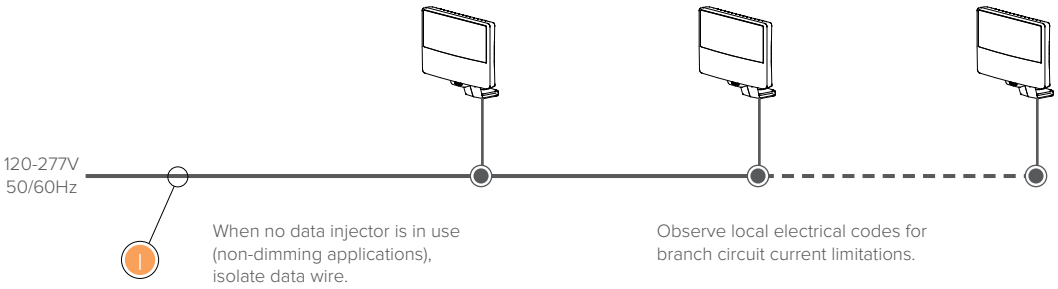

Up to 45 luminaires per run under the following conditions:

- Refer to 'Maximum Circuit Load' table for circuit limitations
- Always observe local electrical codes for branch circuit current limitations

Maximum Current

Through cables and connectors, using Lumascape supplied jumper and leader cables ≤16.0A.

Connection Type

Circuits can be configured as either connectorised or hardwired. For details consult installation instructions and comply with local electrical codes.

Maximum Circuit Load

Maximum Number of Interconnected Fixtures		
Voltage	12.8A	16A
120V	41	45
240V	45	45
277V	45	45

Refer to PowerSync™ installation manual for maximum distance information and typology options.

For non-continuous runs contact factory for details.

The Quadralux Q4 is a medium architectural grade spotlight that combines technology and performance in a modern form factor. Available in white, colour changing and tunable white light engines, the Quadralux Q4 is packed with features including EasyGlow™ visual comfort and CoolDrive™ thermal management technologies. PowerSync™ allows for highly granular digital control via common protocols. Unique and flexible mounting and glare control accessories enable installation in multiple orientations. Lighting professionals now have greater creative flexibility with the choice of designer* and standard LED options.

*Reduces colour-over-angle separation, fewer striations in the beam and shorter blending distances.

Performance

Static White & Colour	Lumen Output (lm)	Efficacy (lm/W)	Peak Intensity (cd)
2,700 K (80 CRI)	5,131	89.0	107,442
3,000 K (80 CRI)	5,274	91.4	110,576
3,500 K (80 CRI)	5,743	99.5	120,405
4,000 K (80 CRI)	5,919	102.5	119,193
5,000 K (70 CRI)	6,168	109.5	124,936
Red	2,022	36.3	67,292
Green	3,661	49.2	120,096
Blue	1,268	16.0	41,916

Static white lumen output values are based on a 10° standard lens.

Dynamic Colour	Lumen Output (lm)	Efficacy (lm/W)	Peak Intensity (cd)
RGBA	2,701	46.9	85,624
RGBW	3,339	56.5	92,199
RGB(1)	-	-	-

Dynamic colour lumen output values based on an 8° designer lens.
(1) RGB available on request.

Tunable White	Lumen Output (lm)	Efficacy (lm/W)	Peak Intensity (cd)
2,700 K - 6,500 K	-	-	-

powersync™ easyglow™ cooldrive™

Performance

Beam Angles	Light Engine	Series	Beam Angles
	Static White & Single Colour	Standard	10°, 15°, 30°, 45°, 40° x 10°, 60° x 10°, 40° x 20°, 60° x 20°
		Designer (1)	6°, 15°, 30°, 45°, 60°, 40° x 10°, 60° x 10°, 40° x 20°, 60° x 20°
	Dynamic Colour	Designer (1)	6°, 15°, 30°, 45°, 60°, 40° x 10°, 60° x 10°, 40° x 20°, 60° x 20°
	Tunable White	Designer (1)	6°, 15°, 30°, 45°, 60°, 40° x 10°, 60° x 10°, 40° x 20°, 60° x 20°

(1) Significantly reduces colour-over-angle separation, fewer striations in the beam and shorter blending distances.

Electrical

LED Power	50W
Consumption	≤58W maximum
Lifetime (L70)	>60,000hrs (B10, L70, TM21)
Input Voltage	120-277V, 50/60Hz
Thermal Management	CoolDrive™ onboard thermal monitoring and control.

Control

Interface	Lumascape PowerSync™
Protocols	DMX/RDM, Artnet, PWM(1), 0-10V (sink or source)(1) Some protocols require additional hardware. For details and for other available protocols contact factory. 1. Not available for Colour Changing
PWM Frequency	2,000Hz flicker free dimming to 0.1%
Systems	Range of third-party controllers

Physical

Housing	Die cast marine grade aluminum, tempered glass lens, isolated stainless steel fasteners, constant torque adjustable mounting bracket (lockable and reversible)
Finish	Superior 9-step powder-coating process, including marine epoxy undercoat and polyester top coat.
Installation	Surface-mounted with galvanic isolator and safety cable attachment point
Adjustable	Constant torque adjustable mounting bracket, lockable and reversible
Ambient Operating Temperature	-40°C to 50°C (-40°F to 122°F)
Surface Temperature	≤59°C (138°F)
Weight	3.2kg (7.0lbs)
Effective Projected Area	743cm^2 (0.8ft^2)

Certification & Compliance

IP Rating	IP66 / IP67
IK Rating	IK8
Vibration Resistance	3G Rating (ANSI C136.31) Contact factory for mounting details.
Environment	Dry, Damp, Wet locations
Certifications	ETL, CE, RCM, CCC

Luminaire Dimensions

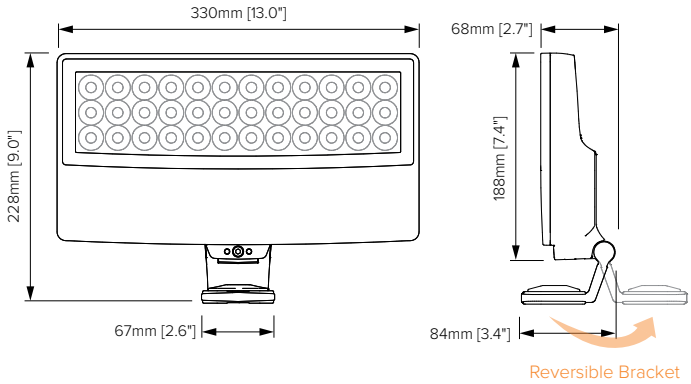

Bracket Dimensions

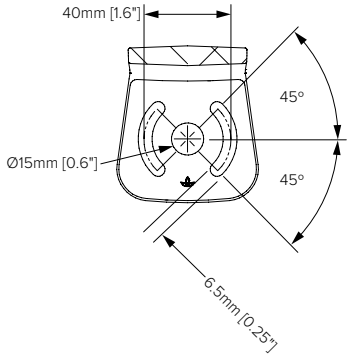

Standard Horizontal Mounting

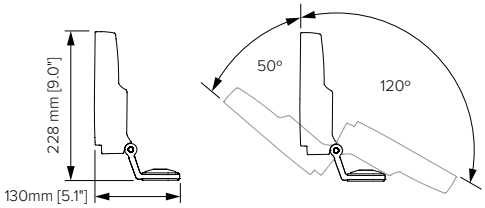

Standard Vertical Mounting

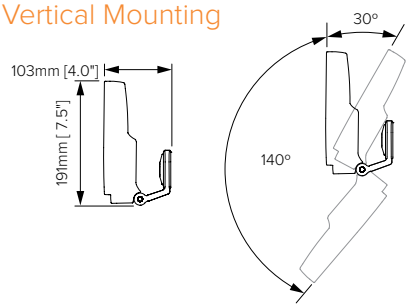

Reverse Horizontal Mounting

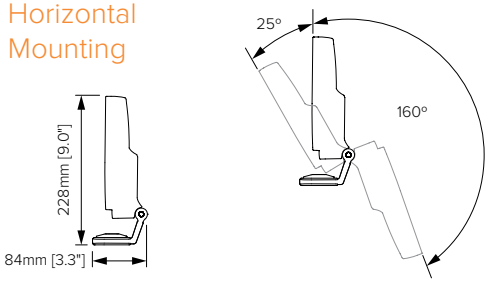

Reverse Vertical Mounting

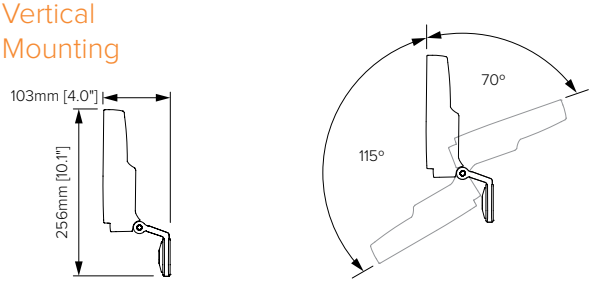

LS9140	50								

Series	Code
Designer	D
Standard	S

Static White & Colour	Code
2,700 K (80 CRI)	827
3,000 K (80 CRI)	830
3,500 K (80 CRI)	835
4,000 K (80 CRI)	840
5,000 K (70 CRI)	750
Red	RED
Green	GRN
Blue	BLU

Standard	Designer	Code
N/A	6°	VN
10°	N/A	NR
15°	15°	NM
30°	30°	ME
45°	45°	WD
N/A	60°	WF
40° x 10°	40° x 10°	NH
10° x 40°	10° x 40°	NV
60° x 10°	60° x 10°	LH
10° x 60°	10° x 60°	LV
40° x 20°	40° x 20°	MH
20° x 40°	20° x 40°	MV
60° x 20°	60° x 20°	WH
20° x 60°	20° x 60°	WV

Dynamic Colour	Code
RGBA	4CA
RGBW	4CW
RGB	RGB(1)

(1) Available on request

Designer	Code
6°	VN
15°	NM
30°	ME
45°	WD
60°	WF
40° x 10°	NH
10° x 40°	NV
60° x 10°	LH
10° x 60°	LV
40° x 20°	MH
20° x 40°	MV
60° x 20°	WH
20° x 60°	WV

Tunable White	Code
2,700 K - 6,500 K	2WT

Designer	Code
6°	VN
15°	NM
30°	ME
45°	WD
60°	WF
40° x 10°	NH
10° x 40°	NV
60° x 10°	LH
10° x 60°	LV
40° x 20°	MH
20° x 40°	MV
60° x 20°	WH
20° x 60°	WV

Connection Type	Code
Flexible cable, single entry, for hard wired installations	84
Flexible cable, single entry, for connectorised installations	77(1)

(1) Not available for North American market.
For other cable entry options contact factory.

Input Voltage	Code
110-240V, 50/60Hz	01(1)
120-277V, 50/60Hz	09(2)

(1) International market
(2) North American market

Control	Code
Non-Dim	ND(1)
Powersync™	PS(2)

(1) For single colour, non-dimming applications only.
(2) Required for all dimming and colour changing applications. LS6540 Data Injector required - order separately

Finish	Code
Black	BL
Anthracite Grey	AG
Basalt Grey	BT
Anodic Silver	SL
White	WT
Dark Bronze	DB
Latte	LT
Dark Aluminum	DA
Custom RAL	CC(1)

(1) Please provide RAL colour.

Cable Length	Code
1.8m (6')	006

For custom cable length contact factory.

Beam Orientations

Beam Orientation for the "LH", "NH", "MH" and "WH" optical system

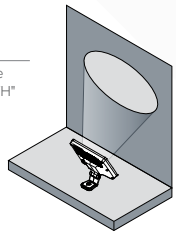

Beam Orientations

Beam Orientation for the "LV", "NV", "MV" and "WV" optical system

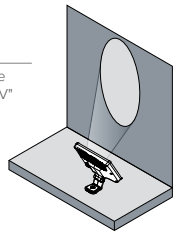

Shielding & Glare Control

A variety of shielding and glare control options are available for the Quadralux Q4 Series. The drawing below depicts the glare control accessories available.

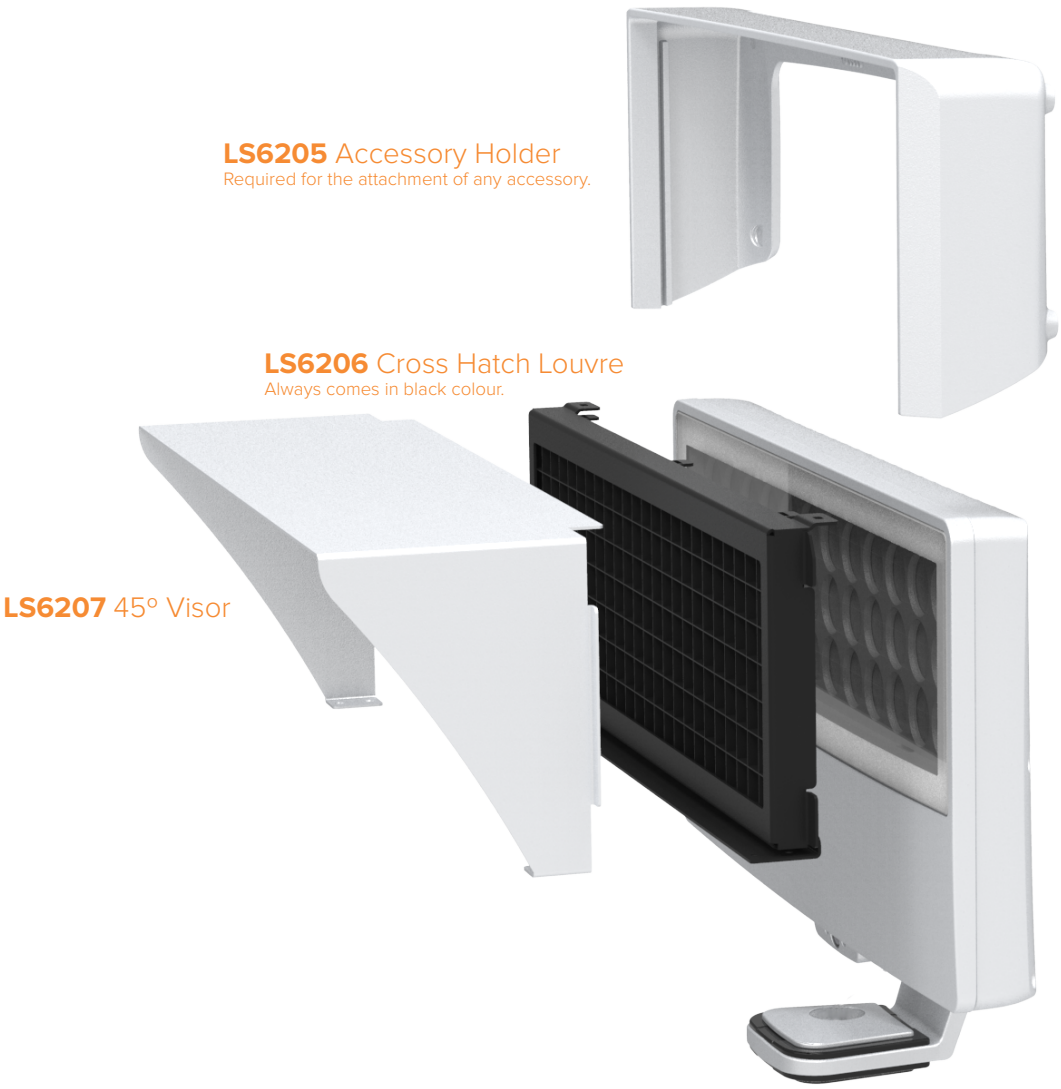

Louvre Length	Code
Accessory Holder	LS6205[1]
45° Visor	LS6207
Custom Visor (Contact factory)	LS6208[2]

(1) Required for the attachment of any accessory.
(2) Contact factory for details.

Finish	Code
Black	BL
Anthracite Grey	AG
Basalt Grey	BT
Anodic Silver	SL
White	WT
Dark Bronze	DB
Latte	LT
Dark Aluminum	DA
Custom RAL	CC[1]

(1) Please provide RAL colour.

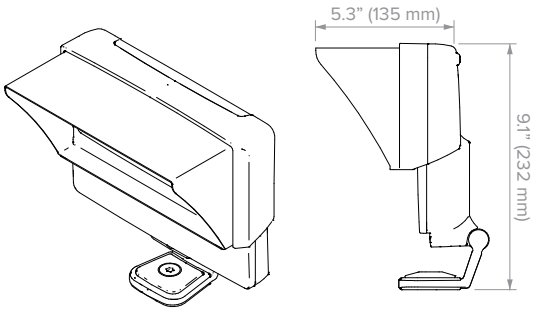

LS6306 | LS6307 Tenon Adaptor (2 3/8" x 4.0" and 3 1/2" x 6.0" options)

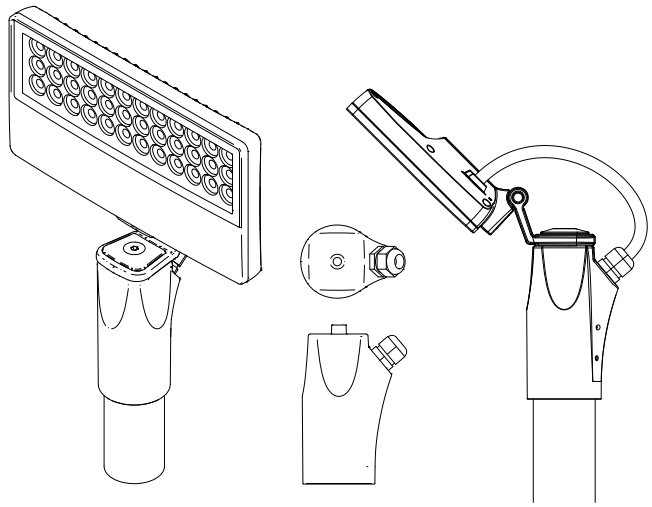

2 3/8" x 4.0" Option Shown

LS6302 | LS6303 | LS6304 | LS6305 Pole Clamp (3.0", 4.0",4.5", 5.0" options)

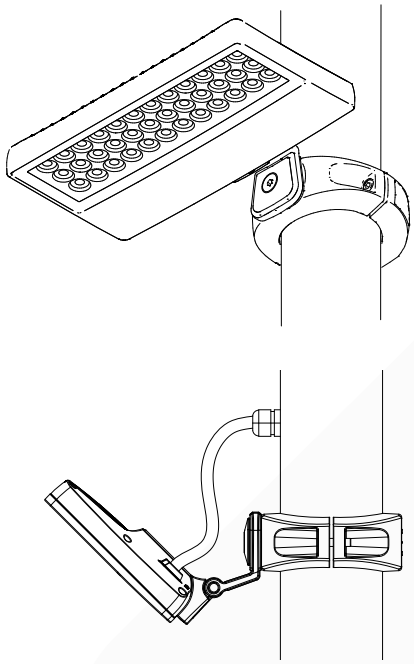

4.5" Option Shown

LS6301 4.0" Junction Box Adapter (North American Market)
LS6301 Surface Mounting Kit (International Market)

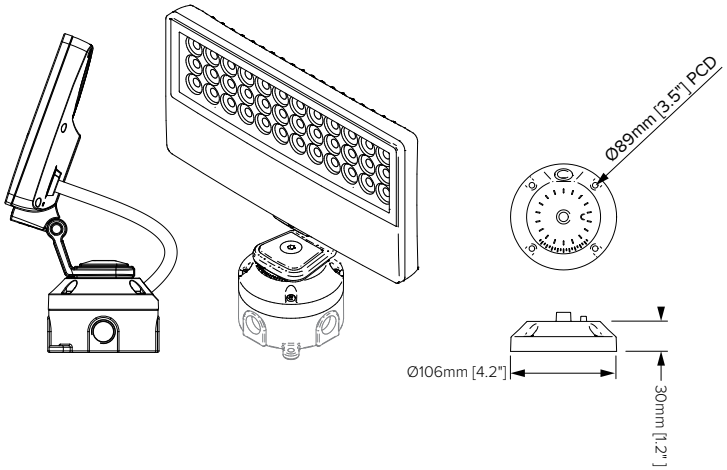

Mounting Accessories	Code
4.0" Junction Box Adapter / Surface Mounting Kit	LS6301
3.0" Pole Clamp	LS6302
4.0" Pole Clamp	LS6303
4.5" Pole Clamp	LS6304
5.0" Pole Clamp	LS6305
2 3/8" x 4.0" Tenon Adapter	LS6306
3.5" x 6.0" Tenon Adapter	LS6307

Finish	Code
Black	BL
Anthracite Grey	AG
Basalt Grey	BT
Anodic Silver	SL
White	WT
Dark Bronze	DB
Latte	LT
Dark Aluminum	DA
Custom RAL	CC(1)

(1) Please provide RAL colour.

Network Topology - PowerSync™ Dimmable

PowerSync™ Topology 1 - Single Trunk Cable

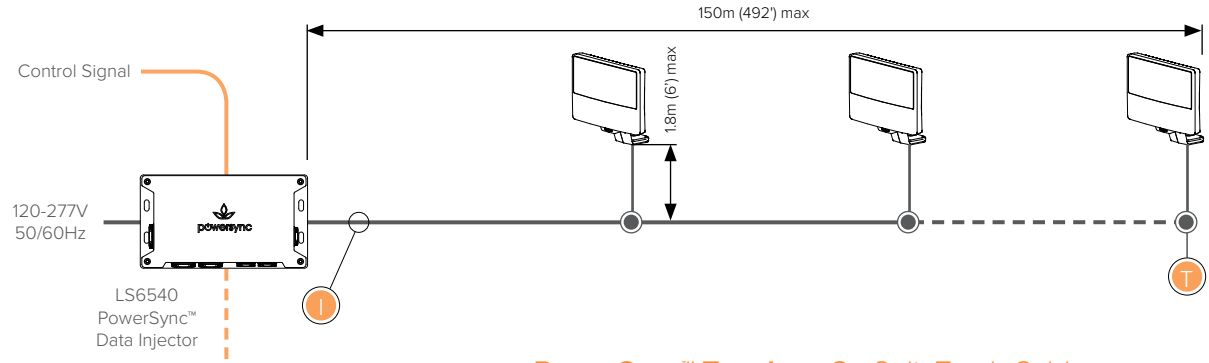

PowerSync™ Topology 2 - Split Trunk Cable

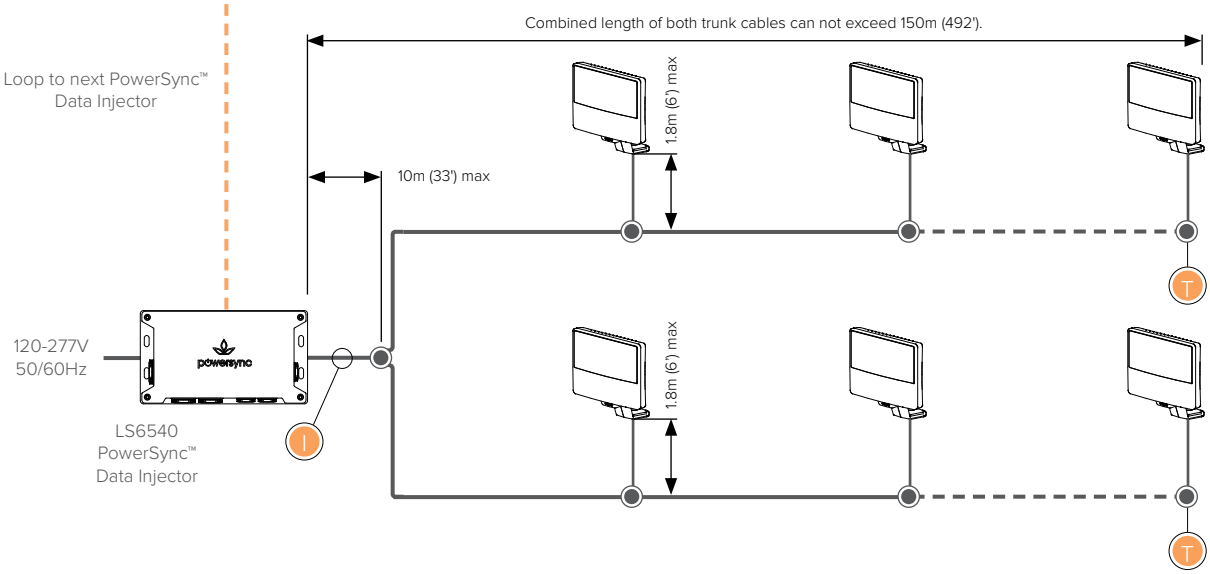

Up to 45 luminaires per run under the following conditions:

- Max total cable run length 150m (492') in up to two trunk cables
- Refer to 'Maximum Circuit Load' table for circuit limitations
- Always observe local electrical codes for branch circuit current limitations
- For run length in excess of 30m (100') use a wire size not lower than 14 AWG

Terminator

Use PowerSync™ terminator, supplied with leader cable to terminate last luminaire in chain.

Maximum Current

Through cables and connectors, using Lumascape supplied jumper and leader cables ≤16.0A.

Connection Type

Circuits can be configured as either connectorised or hardwired. For details consult installation instructions and comply with local electrical codes.

Maximum Circuit Load

Maximum Number of Interconnected Fixtures		
Voltage	12.8A	16A
120V	20	28
240V	45	45
277V	45	45

Refer to PowerSync™ installation manual for maximum distance information and typology options.

For non-continuous runs contact factory for details.

NOTE: The above diagrams are intended to show electrical pathways between luminaires and ancillary device. These diagrams are not intended to show type or colour of cord / wire, luminaire input voltage rating, wire gauge or approved use of the cord / wire supplied with luminaires.

Network Topology - Non-Dimmable

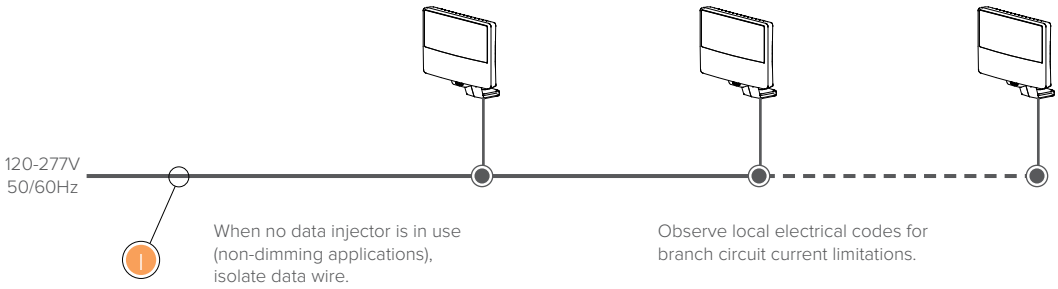

Up to 45 luminaires per run under the following conditions:

- Refer to 'Maximum Circuit Load' table for circuit limitations
- Always observe local electrical codes for branch circuit current limitations

Maximum Current

Through cables and connectors, using Lumascape supplied jumper and leader cables ≤16.0A.

Connection Type

Circuits can be configured as either connectorised or hardwired. For details consult installation instructions and comply with local electrical codes.

Maximum Circuit Load

Maximum Number of Interconnected Fixtures		
Voltage	12.8A	16A
120V	20	28
240V	45	45
277V	45	45

Refer to PowerSync™ installation manual for maximum distance information and typology options.

For non-continuous runs contact factory for details.

NOTE: The above diagrams are intended to show electrical pathways between luminaires and ancillary device. These diagrams are not intended to show type or colour of cord / wire, luminaire input voltage rating, wire gauge or approved use of the cord / wire supplied with luminaires.

The Quadralux Q6 is a large architectural grade spotlight that combines technology and performance in a modern form factor. Available in white, colour changing and tunable white light engines, the Quadralux Q6 is packed with features including EasyGlow™ visual comfort and CoolDrive™ thermal management technologies. PowerSync™ allows for highly granular digital control via common protocols. Unique and flexible mounting and glare control accessories enable installation in multiple orientations. Lighting professionals now have greater creative flexibility with the choice of designer* and standard LED options.

*Reduces colour-over-angle separation, fewer striations in the beam and shorter blending distances.

Performance

Static White & Colour	Lumen Output (lm)	Efficacy (lm/W)	Peak Intensity (cd)
2,700 K (80 CRI)	7,259	88.5	209,345
3,000 K (80 CRI)	7,259	88.5	209,345
3,500 K (80 CRI)	7,910	96.0	228,215
4,000 K (80 CRI)	8,233	99.9	237,530
5,000 K (70 CRI)	8,878	107.7	256,159
Red	-	-	-
Green	-	-	-
Blue	-	-	-

Static white lumen output values are based on a 8° standard lens.

Dynamic Colour	Lumen Output (lm)	Efficacy (lm/W)	Peak Intensity (cd)
RGBA	-	-	-
RGBW	4,367	53.7	165,490
RGB(1)	-	-	-

Dynamic colour lumen output values based on an 8° designer lens.
(1) RGB available on request.

Tunable White	Lumen Output (lm)	Efficacy (lm/W)	Peak Intensity (cd)
2,700 K - 6,500 K	-	-	-

powersync™ easyglow™ cooldrive™

Performance

Beam Angles	Light Engine	Series	Beam Angles
	Static White & Single Colour	Standard	8°, 18°, 30°, 45°, 65°, 40° x 10°, 60° x 10°, 40° x 20°, 60° x 20°
		Designer (1)	4.5°, 10°, 18°, 30°, 65°, 40° x 10°, 60° x 10°, 40° x 20°, 60° x 20°
	Dynamic Colour	Designer (1)	4.5°, 10°, 18°, 30°, 65°, 40° x 10°, 60° x 10°, 40° x 20°, 60° x 20°
	Tunable White	Designer (1)	4.5°, 10°, 18°, 30°, 65°, 40° x 10°, 60° x 10°, 40° x 20°, 60° x 20°

(1) Significantly reduces colour-over-angle separation, fewer striations in the beam and shorter blending distances.

Electrical

LED Power	80W
Consumption	≤86W maximum
Lifetime (L70)	>60,000hrs (B10, L70, TM21)
Input Voltage	120-277V, 50/60Hz
Thermal Management	CoolDrive™ onboard thermal monitoring and control.

Control

Interface	Lumascape PowerSync™
Protocols	DMX/RDM, Artnet, PWM(1), 0-10V (sink or source)(1) Some protocols require additional hardware. For details and for other available protocols contact factory. 1. Not available for Colour Changing
PWM Frequency	2,000Hz flicker free dimming to 0.1%
Systems	Range of third-party controllers

Physical

Housing	Die cast marine grade aluminum, tempered glass lens, isolated stainless steel fasteners, adjustable mounting yoke (lockable), with mounting surface galvanic isolator.
Finish	Superior 9-step powder-coating process, including marine epoxy undercoat and polyester top coat.
Installation	Surface-mounted with galvanic isolator
Adjustable	Adjustable mounting yoke
Ambient Operating Temperature	-40°C to 50°C (-40°F to 122°F)
Surface Temperature	≤59°C (138°F)
Weight	7.0kg (15.4lbs)
Effective Projected Area	1,142cm^2 (1.2ft^2)

Certification & Compliance

IP Rating	IP66 / IP67
IK Rating	IK9
Vibration Resistance	3G Rating (ANSI C136.31) Contact factory for mounting details.
Environment	Dry, Damp, Wet locations
Certifications	ETL, CE, RCM, CCC

Luminaire Dimensions

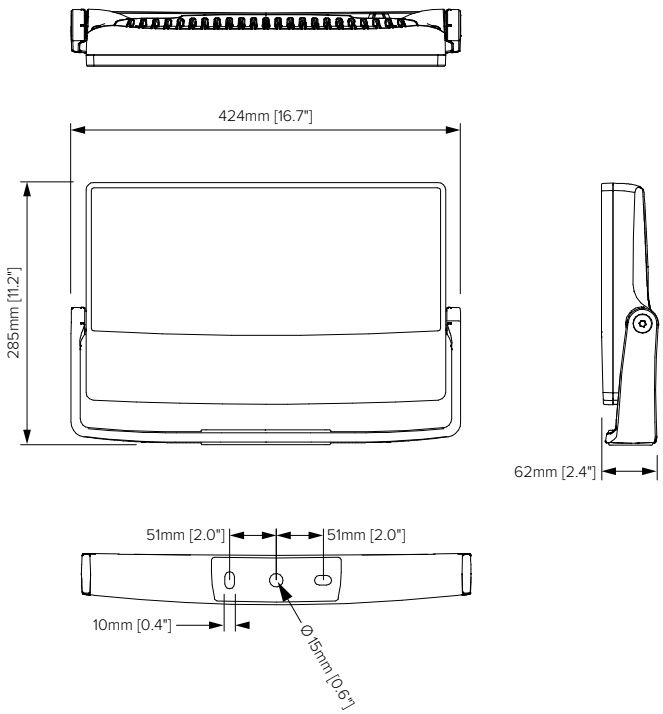

| LS9160 | 80 | | | | | | | | | | |

Series	Code
Designer	D
Standard	S

Static White & Colour	Code
2,700 K (80 CRI)	827
3,000 K (80 CRI)	830
3,500 K (80 CRI)	835
4,000 K (80 CRI)	840
5,000 K (70 CRI)	750
Red	RED
Green	GRN
Blue	BLU

Standard	Designer	Code
N/A	4.5°	VN
8°	10°	NR
18°	18°	NM
30°	30°	ME
45°	N/A	WD
65°	65°	WF
40° x 10°	40° x 10°	NH
10° x 40°	10° x 40°	NV
60° x 10°	60° x 10°	LH
10° x 60°	10° x 60°	LV
40° x 20°	40° x 20°	MH
20° x 40°	20° x 40°	MV
60° x 20°	60° x 20°	WH
20° x 60°	20° x 60°	WV

Dynamic Colour	Code
RGBA	4CA
RGBW	4CW
RGB	RGB[1]

(1) Available on request

Designer	Code
4.5°	VN
10°	NR
18°	NM
30°	ME
65°	WF
40° x 10°	NH
10° x 40°	NV
60° x 10°	LH
10° x 60°	LV
40° x 20°	MH
20° x 40°	MV
60° x 20°	WH
20° x 60°	WV

Tunable White	Code
2,700 K - 6,500 K	2WT

Designer	Code
4.5°	VN
10°	NR
18°	NM
30°	ME
65°	WF
40° x 10°	NH
10° x 40°	NV
60° x 10°	LH
10° x 60°	LV
40° x 20°	MH
20° x 40°	MV
60° x 20°	WH
20° x 60°	WV

Connection Type	Code
Flexible cable, single entry, for hard wired installations	84
Flexible cable, single entry, for connectorised installations	77[1]

(1) Not available for North American market.
For other cable entry options contact factory.

Mounting	Code
Standard Bracket	S
3G Rated Bracket	G

Input Voltage	Code
110-240V, 50/60Hz	01[1]
120-277V, 50/60Hz	09[2]

(1) International market
(2) North American market

Control	Code
Non-Dim	ND[1]
Powersync™	PS[2]

(1) For single colour, non-dimming applications only.
(2) Required for all dimming and colour changing applications. LS6540 Data Injector required - order separately

Finish	Code
Black	BL
Anthracite Grey	AG
Basalt Grey	BT
Anodic Silver	SL
White	WT
Dark Bronze	DB
Latte	LT
Dark Aluminum	DA
Custom RAL	CC[1]

(1) Please provide RAL colour.

Cable Length	Code
1.8m (6')	006

For custom cable length contact factory.

Beam Orientations

Beam Orientation for the "LH", "NH", "MH" and "WH" optical system

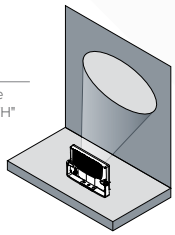

Beam Orientations

Beam Orientation for the "LV", "NV", "MV" and "WV" optical system

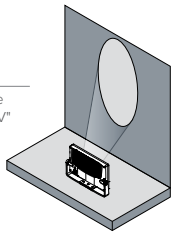

Shielding & Glare Control

A variety of shielding and glare control options are available for the Quadralux Q6 Series. The drawing below depicts the glare control accessories available.

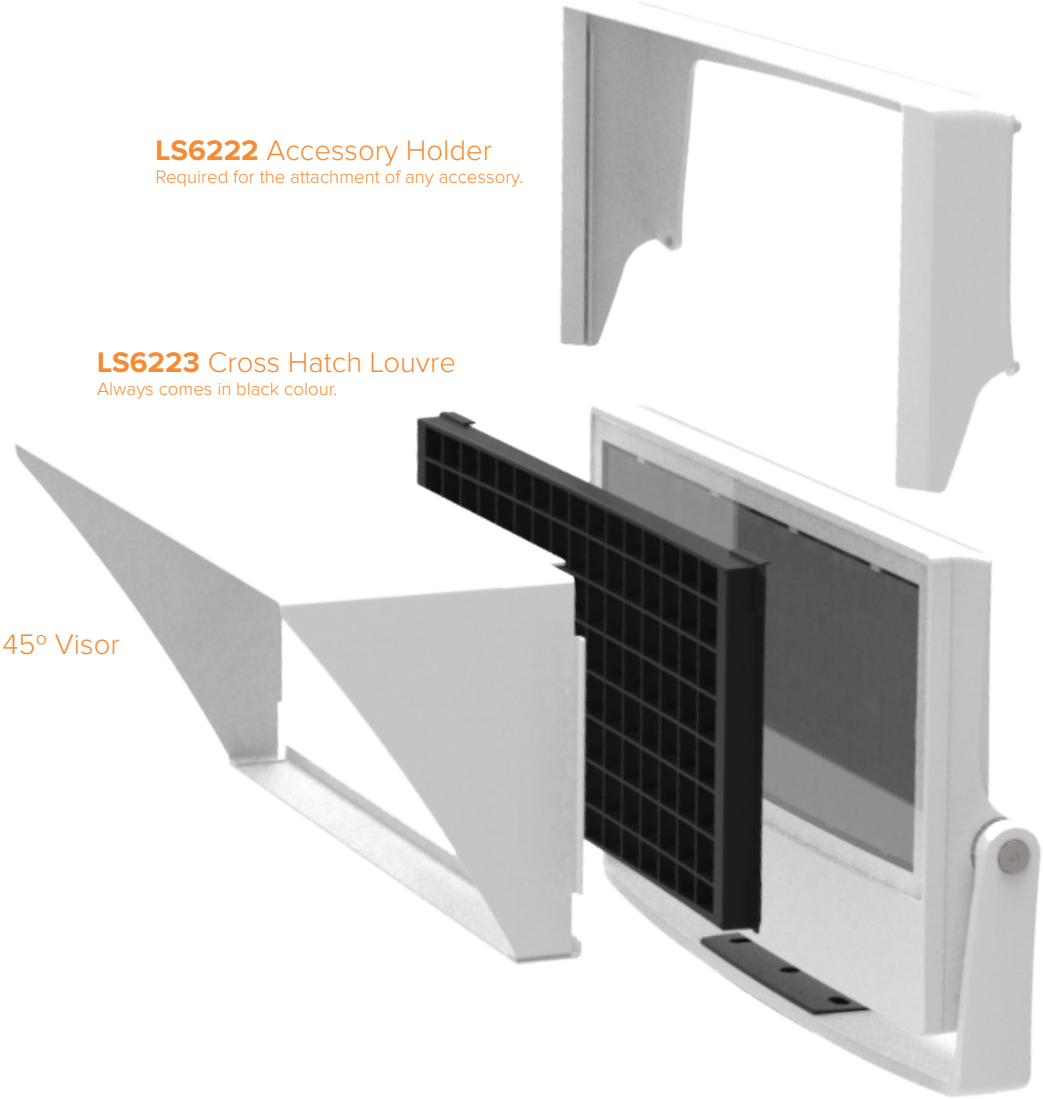

Accessory	Code
Accessory Holder	LS6222[1]
45° Visor	LS6224
Custom Visor (Contact factory)	LS6225[2]

(1) Required for the attachment of any accessory.
(2) Contact factory for details.

Finish	Code
Black	BL
Anthracite Grey	AG
Basalt Grey	BT
Anodic Silver	SL
White	WT
Dark Bronze	DB
Latte	LT
Dark Aluminum	DA
Custom RAL	CC[1]

(1) Please provide RAL colour.

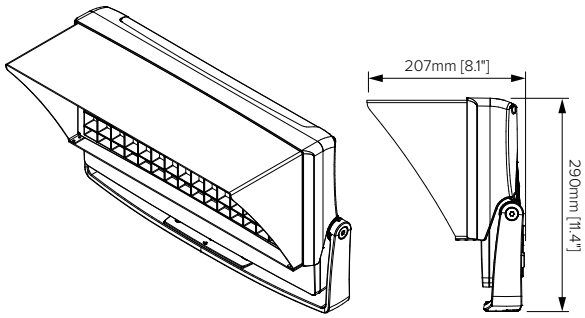

LS6317 | LS6318 | LS6319 | LS6320

Pole Clamp (3.0", 4.0",4.5", 5.0" options)

Mounting Accessories	Code
3.0” Pole Clamp	LS6317
4.0” Pole Clamp	LS6318
4.5” Pole Clamp	LS6319
5.0” Pole Clamp	LS6320

Luminaire must be ordered with a 3G rated bracket.

Finish	Code
Black	BL
Anthracite Grey	AG
Basalt Grey	BT
Anodic Silver	SL
White	WT
Dark Bronze	DB
Latte	LT
Dark Aluminum	DA
Custom RAL	CC(1)

(1) Please provide RAL colour.

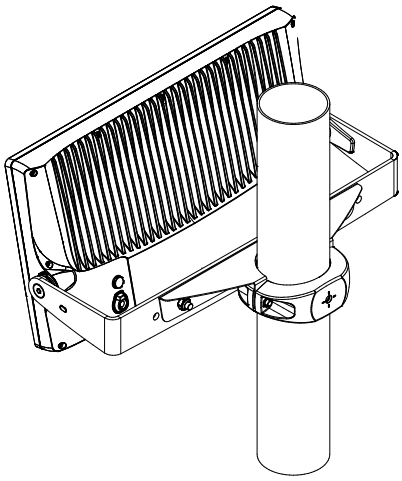

Network Topology - PowerSync™ Dimmable

PowerSync™ Topology 1 - Single Trunk Cable

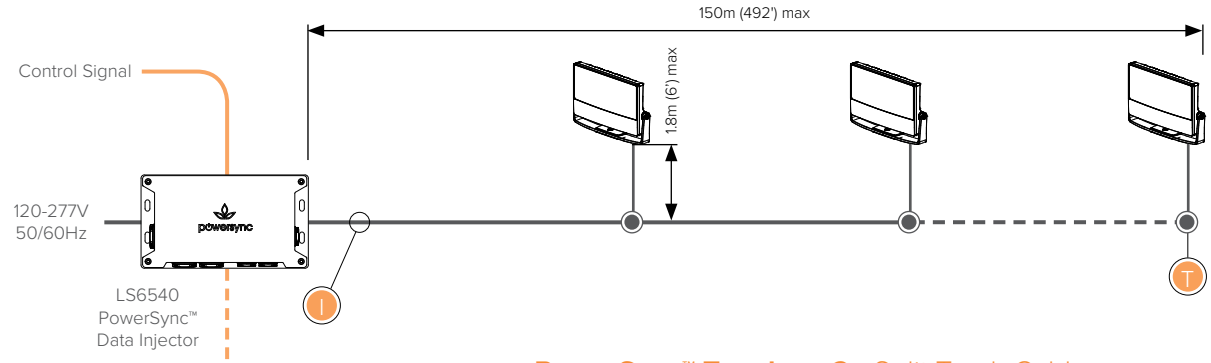

PowerSync™ Topology 2 - Split Trunk Cable

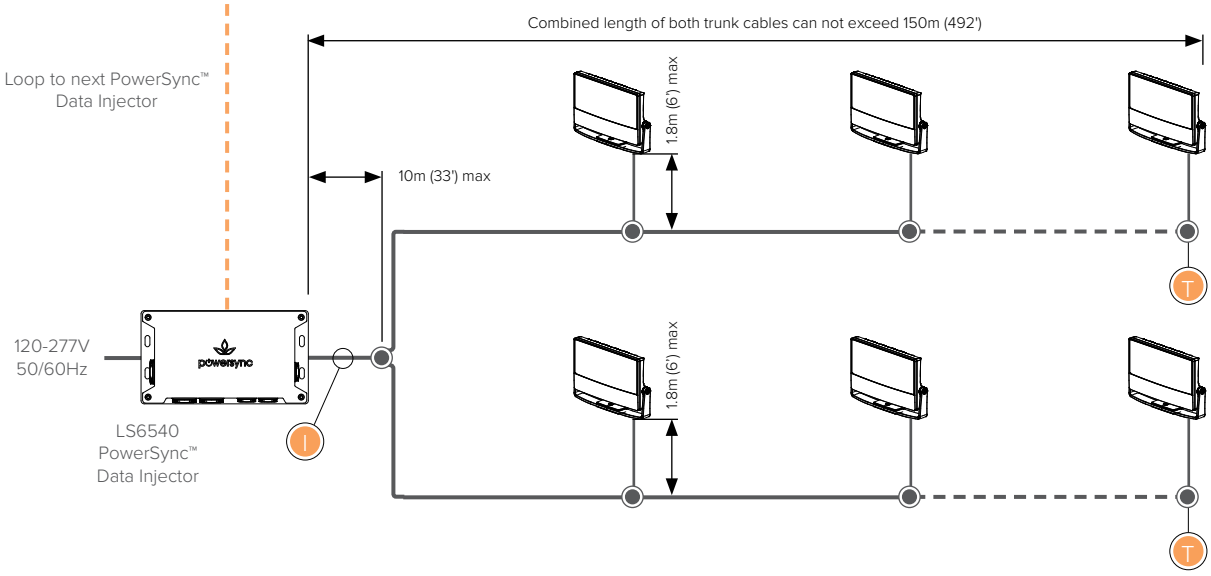

Up to 42 luminaires per run under the following conditions:

- Max total cable run length 150m (492') in up to two trunk cables
- Refer to 'Maximum Circuit Load' table for circuit limitations
- Always observe local electrical codes for branch circuit current limitations
- For run length in excess of 30m (100') use a wire size not lower than 14 AWG

T Terminator

Use PowerSync™ terminator, supplied with leader cable to terminate last luminaire in chain.

I Maximum Current

Through cables and connectors, using Lumascape supplied jumper and leader cables ≤16.0A.

Connection Type

Circuits can be configured as either connectorised or hardwired. For details consult installation instructions and comply with local electrical codes.

Maximum Circuit Load

Maximum Number of Interconnected Fixtures		
Voltage	12.8A	16A
120V	14	18
240V	30	34
277V	35	42

Refer to PowerSync™ installation manual for maximum distance information and typology options.

For non-continuous runs contact factory for details.

NOTE: The above diagrams are intended to show electrical pathways between luminaires and ancillary device. These diagrams are not intended to show type or colour of cord / wire, luminaire input voltage rating, wire gauge or approved use of the cord / wire supplied with luminaires.

Network Topology - Non-Dimmable

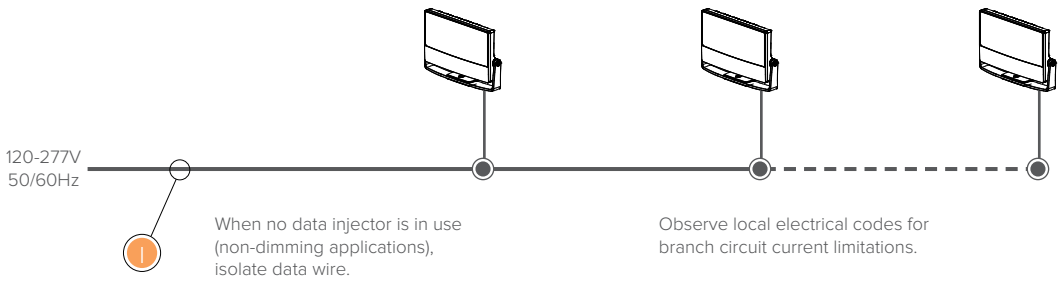

Up to 42 luminaires per run under the following conditions:

- Refer to 'Max Circuit Load' table for maximum circuit loads.
- Always observe local electrical codes for branch circuit current limitations.

Maximum Current

Through cables and connectors, using Lumascape supplied jumper and leader cables ≤16.0A.

Connection Type

Circuits can be configured as either connectorised or hardwired. For details consult installation instructions and comply with local electrical codes.

Maximum Circuit Load

Maximum Number of Interconnected Fixtures		
Voltage	**12.8A**	**16A**
120V	14	18
240V	30	34
277V	35	42

Refer to PowerSync™ installation manual for maximum distance information and typology options.

For non-continuous runs contact factory for details.

NOTE: The above diagrams are intended to show electrical pathways between luminaires and ancillary device. These diagrams are not intended to show type or colour of cord / wire, luminaire input voltage rating, wire gauge or approved use of the cord / wire supplied with luminaires.

The Quadralux Q8 is an extra large architectural grade spotlight that combines technology and performance in a modern form factor to achieve a peak intensity of over 1 million cd (with a 4,000 K light engine and 4.5° beam). Available in white, colour changing and tunable white light engines, the Quadralux Q8 is packed with features including EasyGlow™ visual comfort and CoolDrive™ thermal management technologies. PowerSync™ allows for highly granular digital control via common protocols. Unique and flexible mounting and glare control accessories enable installation in multiple orientations. Lighting professionals now have greater creative flexibility with the choice of designer* and standard LED options.

*Reduces colour-over-angle separation, fewer striations in the beam and shorter blending distances.

Performance

Static White & Colour	Lumen Output (lm)	Efficacy (lm/W)	Peak Intensity (cd)
2,700 K (80 CRI)	14,518	88.5	418,690
3,000 K (80 CRI)	14,518	88.5	418,690
3,500 K (80 CRI)	15,161	97.5	440,799
4,000 K (80 CRI)	15,780	101.5	458,791
5,000 K (70 CRI)	16,929	107.7	488,444
Red	5,126	39.5	236,752
Green	9,668	50.0	437,336
Blue	2,605	18.1	116,648

Static white lumen output values are based on a 8° standard lens.

Dynamic Colour	Lumen Output (lm)	Efficacy (lm/W)	Peak Intensity (cd)
RGBA	-	-	-
RGBW	8,253	59.1	297,731
RGB(1)	-	-	-

Dynamic colour lumen output values based on an 8° designer lens.
(1) RGB available on request.

Tunable White	Lumen Output (lm)	Efficacy (lm/W)	Peak Intensity (cd)
2,700 K - 6,500 K	-	-	-

powersync™ easyglow™ cooldrive™

Performance

Beam Angles	Light Engine	Series	Beam Angles
	Static White & Single Colour	Standard	8°, 18°, 30°, 45°, 65°, 40° x 10°, 60° x 10°, 40° x 20°, 60° x 20°
		Designer (1)	4.5°, 10°, 18°, 30°, 65°, 40° x 10°, 60° x 10°, 40° x 20°, 60° x 20°
	Dynamic Colour	Designer (1)	4.5°, 10°, 18°, 30°, 65°, 40° x 10°, 60° x 10°, 40° x 20°, 60° x 20°
	Tunable White	Designer (1)	4.5°, 10°, 18°, 30°, 65°, 40° x 10°, 60° x 10°, 40° x 20°, 60° x 20°

(1) Significantly reduces colour-over-angle separation, fewer striations in the beam and shorter blending distances.

Electrical

LED Power	150W
Consumption	≤160W maximum
Lifetime (L70)	>60,000hrs (B10, L70, TM21)
Input Voltage	120-277V, 50/60Hz
Thermal Management	CoolDrive™ onboard thermal monitoring and control.

Control

Interface	Lumascape PowerSync™
Protocols	DMX/RDM, Artnet, PWM(1), 0-10V (sink or source)(1), Phase dimming(1)(2) Some protocols require additional hardware. For details and for other available protocols contact factory. 1. Not available for Colour Changing 2. Not available for Tunable White
PWM Frequency	2,000Hz flicker free dimming to 0.1%
Systems	Range of third-party controllers

Physical

Housing	Die cast marine grade aluminum, tempered glass lens, isolated stainless steel fasteners, adjustable mounting yoke (lockable), with mounting surface galvanic isolator.
Finish	Superior 9-step powder-coating process, including marine epoxy undercoat and polyester top coat.
Installation	Surface-mounted with galvanic isolator
Adjustable	Adjustable mounting yoke
Ambient Operating Temperature	-40°C to 50°C (-40°F to 122°F)
Surface Temperature	≤59°C (138°F)
Weight	13.0kg (28.6lbs)
Effective Projected Area	1,949cm^2 (2.1ft^2)

Certification & Compliance

IP Rating	IP66 / IP67
IK Rating	IK10
Vibration Resistance	3G Rating (ANSI C136.31) Contact factory for mounting details.
Environment	Dry, Damp, Wet locations
Certifications	ETL, CE, RCM, CCC

Luminaire Dimensions

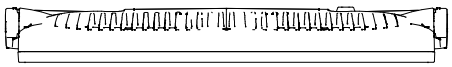

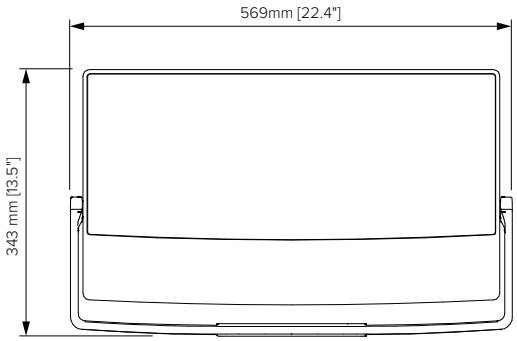

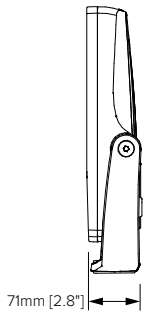

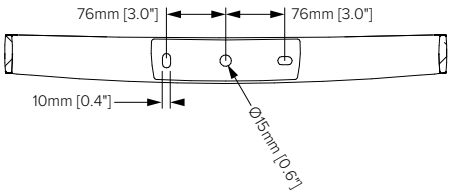

| LS9180 | 150 | | | | | | | | | | |

Series	Code
Designer	D
Standard	S

Static White & Colour	Code
2,700 K (80 CRI)	827
3,000 K (80 CRI)	830
3,500 K (80 CRI)	835
4,000 K (80 CRI)	840
5,000 K (70 CRI)	750
Red	RED
Green	GRN
Blue	BLU

Standard	Designer	Code
N/A	4.5°	VN
8°	10°	NR
18°	18°	NM
30°	30°	ME
45°	N/A	WD
65°	65°	WF
40° x 10°	40° x 10°	NH
10° x 40°	10° x 40°	NV
60° x 10°	60° x 10°	LH
10° x 60°	10° x 60°	LV
40° x 20°	40° x 20°	MH
20° x 40°	20° x 40°	MV
60° x 20°	60° x 20°	WH
20° x 60°	20° x 60°	WV

Dynamic Colour	Code
RGBA	4CA
RGBW	4CW
RGB	RGB[1]

(1) Available on request

Designer	Code
4.5°	VN
10°	NR
18°	NM
30°	ME
65°	WF
40° x 10°	NH
10° x 40°	NV
60° x 10°	LH
10° x 60°	LV
40° x 20°	MH
20° x 40°	MV
60° x 20°	WH
20° x 60°	WV

Tunable White	Code
2,700 K - 6,500 K	2WT

Designer	Code
4.5°	VN
10°	NR
18°	NM
30°	ME
65°	WF
40° x 10°	NH
10° x 40°	NV
60° x 10°	LH
10° x 60°	LV
40° x 20°	MH
20° x 40°	MV
60° x 20°	WH
20° x 60°	WV

Connection Type	Code
Flexible cable, single entry, for hard wired installations	84
Flexible cable, single entry, for connectorised installations	77[1]

(1) Not available for North American market.
For other cable entry options contact factory.

Mounting	Code
Standard Bracket	S
3G Rated Bracket	G

Input Voltage	Code
110-240V, 50/60Hz	01[1]
120-277V, 50/60Hz	09[2]

(1) International market
(2) North American market

Control	Code
Non-Dim	ND[1]
Powersync™	PS[2]

(1) For single colour, non-dimming applications only.
(2) Required for all dimming and colour changing applications. LS6540 Data Injector required - order separately

Finish	Code
Black	BL
Anthracite Grey	AG
Basalt Grey	BT
Anodic Silver	SL
White	WT
Dark Bronze	DB
Latte	LT
Dark Aluminum	DA
Custom RAL	CC[1]

(1) Please provide RAL colour.

Cable Length	Code
1.8m (6')	006

For custom cable length contact factory.

Beam Orientations

Beam Orientation for the "LH", "NH", "MH" and "WH" optical system

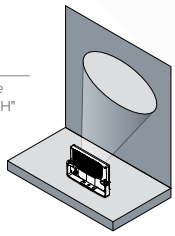

Beam Orientations

Beam Orientation for the "LV", "NV", "MV" and "WV" optical system

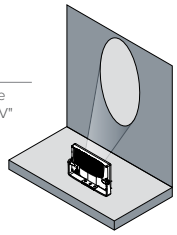

Shielding & Glare Control

A variety of shielding and glare control options are available for the Quadralux Q8 Series. The drawing below depicts the glare control accessories available.

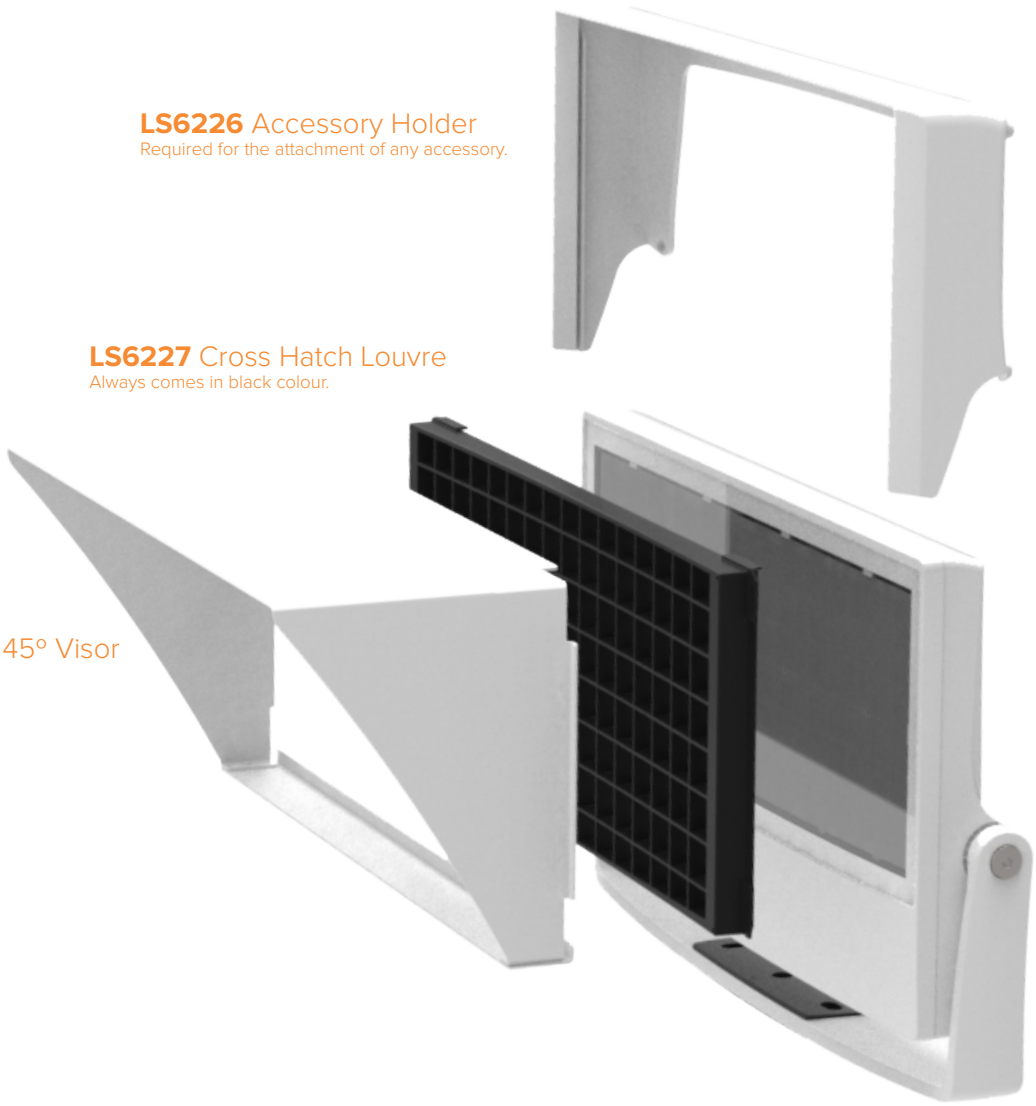

Louvre Length	Code
Accessory Holder	LS6226[1]
45° Visor	LS6228
Custom Visor (Contact factory)	LS6229[2]

(1) Required for the attachment of any accessory.
(2) Contact factory for details.

Finish	Code
Black	BL
Anthracite Grey	AG
Basalt Grey	BT
Anodic Silver	SL
White	WT
Dark Bronze	DB
Latte	LT
Dark Aluminum	DA
Custom RAL	CC[1]

(1) Please provide RAL colour.

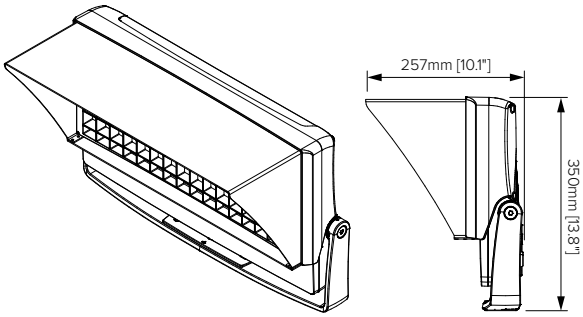

LS6318 | LS6319 | LS6320

Pole Clamp (4.0",4.5", 5.0" options)

Mounting Accessories	Code
4.0” Pole Clamp	LS6318
4.5” Pole Clamp	LS6319
5.0” Pole Clamp	LS6320

Luminaire must be ordered with a 3G rated bracket.

Finish	Code
Black	BL
Anthracite Grey	AG
Basalt Grey	BT
Anodic Silver	SL
White	WT
Dark Bronze	DB
Latte	LT
Dark Aluminum	DA
Custom RAL	CC(1)

(1) Please provide RAL colour.

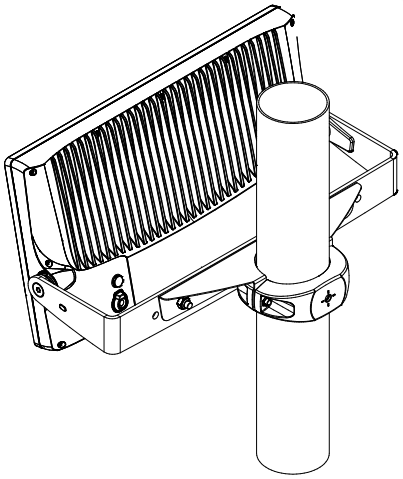

Network Topology - PowerSync™ Dimmable

PowerSync™ Topology 1 - Single Trunk Cable

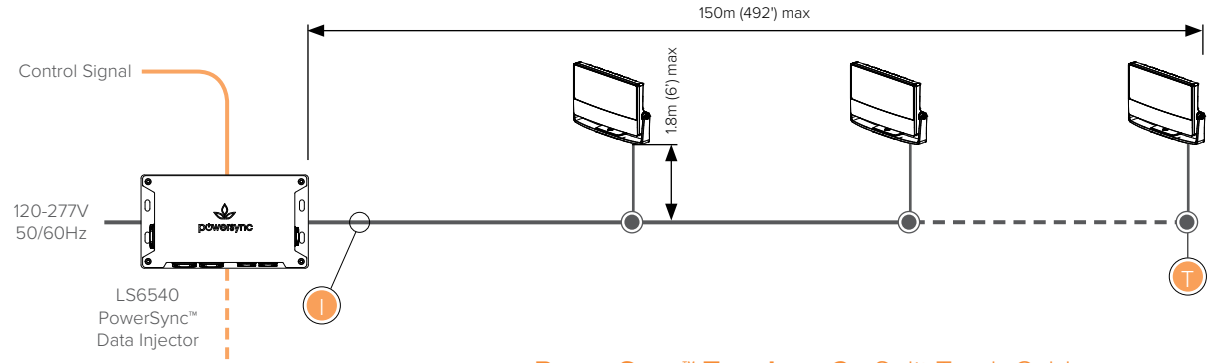

PowerSync™ Topology 2 - Split Trunk Cable

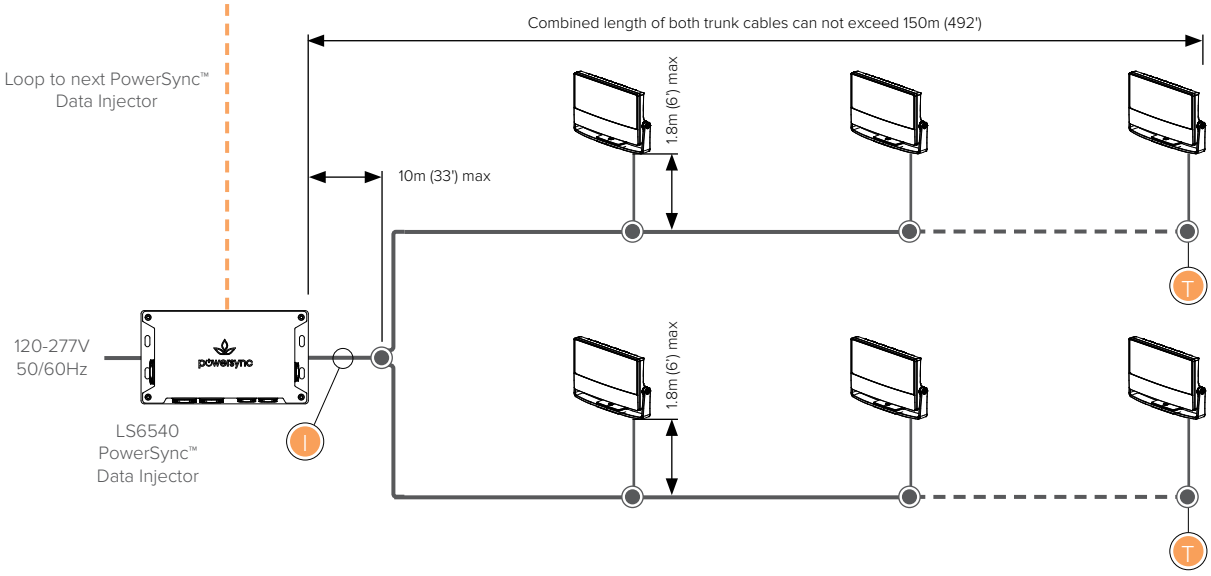

Up to 21 luminaires per run under the following conditions:

- Max total cable run length 150m (492') in up to two trunk cables
- Refer to 'Maximum Circuit Load' table for circuit limitations
- Always observe local electrical codes for branch circuit current limitations
- For run length in excess of 30m (100') use a wire size not lower than 14 AWG

T Terminator

Use PowerSync™ terminator, supplied with leader cable to terminate last luminaire in chain.

I Maximum Current

Through cables and connectors, using Lumascape supplied jumper and leader cables ≤16.0A.

Connection Type

Circuits can be configured as either connectorised or hardwired. For details consult installation instructions and comply with local electrical codes.

Maximum Circuit Load

Maximum Number of Interconnected Fixtures		
Voltage	12.8A	16A
120V	7	8
240V	15	17
277V	17	21

Refer to PowerSync™ installation manual for maximum distance information and typology options.

For non-continuous runs contact factory for details.

NOTE: The above diagrams are intended to show electrical pathways between luminaires and ancillary device. These diagrams are not intended to show type or colour of cord / wire, luminaire input voltage rating, wire gauge or approved use of the cord / wire supplied with luminaires.

Network Topology - Non-Dimmable

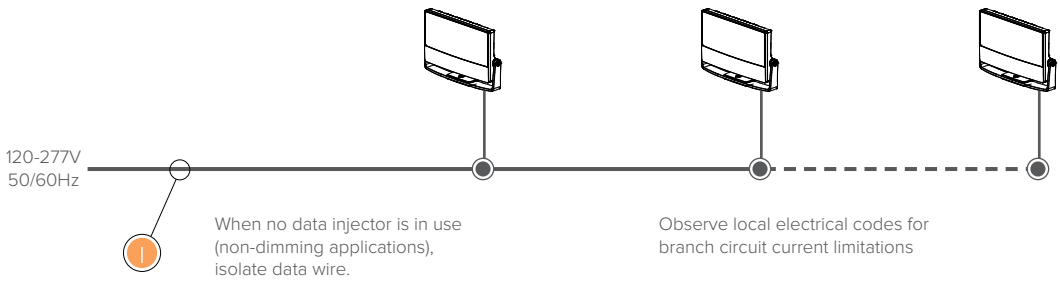

Up to 21 luminaires per run under the following conditions:

- Refer to 'Maximum Circuit Load' table for circuit limitations
- Always observe local electrical codes for branch circuit current limitations

Maximum Current

Through cables and connectors, using Lumascape supplied jumper and leader cables ≤16.0A.

Connection Type

Circuits can be configured as either connectorised or hardwired. For details consult installation instructions and comply with local electrical codes.

Maximum Circuit Load

Maximum Number of Interconnected Fixtures		
Voltage	12.8A	16A
120V	7	8
240V	15	17
277V	17	21

Refer to PowerSync™ installation manual for maximum distance information and typology options.

For non-continuous runs contact factory for details.

NOTE: The above diagrams are intended to show electrical pathways between luminaires and ancillary device. These diagrams are not intended to show type or colour of cord / wire, luminaire input voltage rating, wire gauge or approved use of the cord / wire supplied with luminaires.

Commercial Production from **Q1 2018**

The LS9010 Linealux is a low-power, architectural-grade luminaire that combines technology and performance in a stylish low profile linear form factor. Available in white, colour-changing and tunable-white light engines, the Linealux L1 is packed with features including EasyGlow™ visual comfort and CoolDrive™ thermal management technologies. PowerSync™ allows for highly granular digital control via common protocols. Unique and flexible optics allow wide end-to-end spacing whilst maintaining excellent uniformity. Manufactured from high grade extruded aluminium several finishing options are available including an anodised finish.

Performance

Static White & Colour	Lumen Output (lm/ft)	Efficacy (lm/W)	Peak Intensity (cd)
2,700 K (80 CRI)	-	-	-
3,000 K (80 CRI)	-	-	-
3,500 K (80 CRI)	200	-	-
4,000 K (80 CRI)	-	-	-
5,000 K (70 CRI)	-	-	-
Red	-	-	-
Green	-	-	-
Blue	-	-	-

Static white lumen output values are based on 4W/ft, 4ft luminaire with 10° lens.

Dynamic Colour	Lumen Output (lm/ft)	Efficacy (lm/W)	Peak Intensity (cd)
RGBA	-	-	-
RGBW with Royal Blue	-	-	-

Tunable White	Lumen Output (lm/ft)	Efficacy (lm/W)	Peak Intensity (cd)
2,700 K - 6,500 K	-	-	-

powersync™ easyglow™ cooldrive™

Performance

Beam Angles	45° x 12°, 45° x 20°, 45° x 30°, 45° x 40°

Electrical

LED Power	4W/ft or 6W/ft
Consumption	≤7W/ft maximum
Lifetime (L70)	>60,000hrs (B10, L70, TM21)
Input Voltage	Low Voltage 48V DC
Thermal Management	CoolDrive™ onboard thermal monitoring and control.

Control

Interface	Lumascape PowerSync™
Protocols	DMX/RDM, Artnet, PWM[1], 0-10V (sink or source)[1] Some protocols require additional hardware. For details and for other available protocols contact factory. 1. Not available for Colour Changing
PWM Frequency	1,600Hz flicker free dimming to 0.1%
Control Resolution	100mm (3.9"), 300mm (11.8"), luminaire length configurable control resolution.
Systems	Range of third-party controllers

Physical

Housing	Extruded marine grade aluminium, tempered glass lens
Finish	Anodised Aluminium, or superior 9-step powder-coating process, including marine epoxy undercoat and polyester top coat.
Installation	Surface-mounted
Adjustable	Multi-positional
Ambient Operating Temperature	-40°C to 50°C (-40°F to 122°F)
Surface Temperature	≤35°C (95°F)
Weight	4' section - 1.1kg (2.4lb)

Certification & Compliance

IP Rating	IP66 / IP67
IK Rating	IK6 (Pending)
Environment	Dry, Damp, Wet locations
Certifications	ETL, CE, RCM, CCC (Pending)

Luminaire Dimensions - Bottom Entry

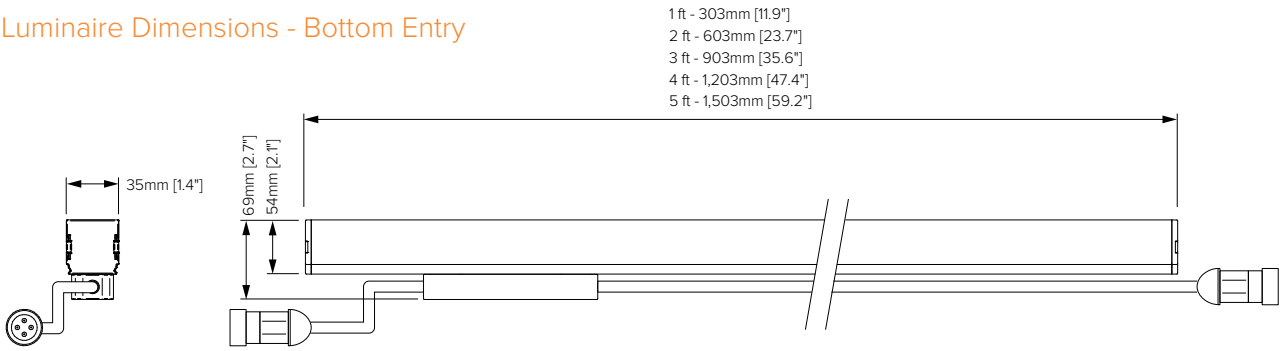

Custom brackets and mounting options are available on request.

Luminaire Dimensions - Side Entry

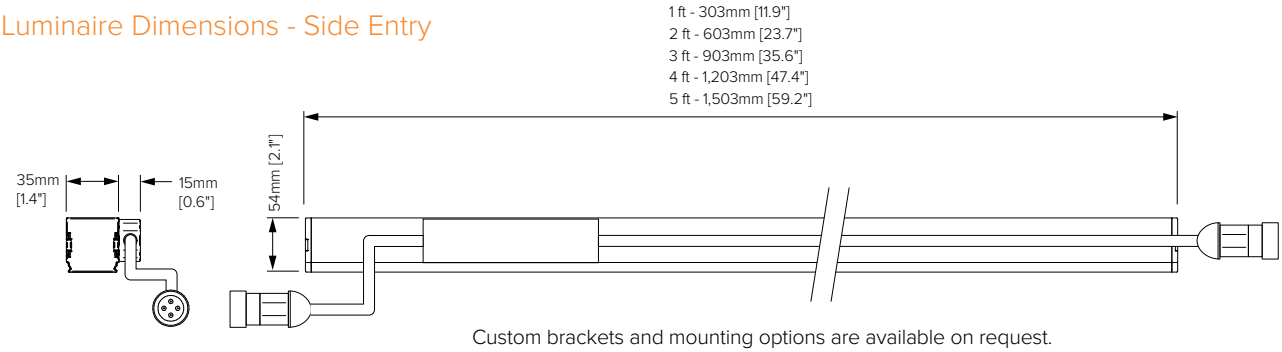

Custom brackets and mounting options are available on request.

LS9010												

Power	Code
4W/ft	04W
6W/ft	06W

Static White & Colour	Code
2,700 K (80 CRI)	827
3,000 K (80 CRI)	830
3,500 K (80 CRI)	835
4,000 K (80 CRI)	840
5,000 K (70 CRI)	750
Red	RED
Green	GRN
Blue	BLU

Dynamic Colour	Code
RGBA	4CA
RGBW with Royal Blue	4BW

Tunable White	Code
2,700 K - 6,500 K	2WT

Connection Type	Code
Flexible cable, single entry, for connectorised installations	67
Flexible cable, double entry, for connectorised installations	63

Beam	Code
45° x 12°	LH
45° x 20°	NH
45° x 30°	MH
45° x 40°	WH

Length	Code
1' - 303mm (11.9")	1
2' - 603mm (23.7")	2
3' - 903mm (35.6")	3
4' - 1,203mm (47.4")	4
5' - 1,503mm (59.2")	5

Housing	Code
Standard	A
Low Profile	B(1)

(1) Side cable entry

Control Resolution	Code
100mm (3.9")	3
300mm (11.8")	4

Mounting	Code
Adjustable Bracket	A
Fixed Bracket	B

Input Voltage	Code
48V DC	07(1)
48V DC	13(2)

(1) International market

(2) North American market

Control	Code
Non-Dim	ND(1)
Powersync™	PS(2)

(1) For single colour, non-dimming applications only.

(2) Required for all dimming and colour changing applications. LS6550 Data Injector required - order separately

Finish	Code
Anodised Clear	AC

Other finishes available on request. Minimum order quantities apply.

Luminaire Gap	Code
End-To-End (ETE)	000(1)
0.3m (1') Gap	001
0.6m (2') Gap	002
0.9m (3') Gap	003
1.8m (6') Gap	006

(1) Default - Minimum length for ETE connection.

Beam Orientations

Beam Orientation for the "LH", "NH", "MH" and "WH" optical system

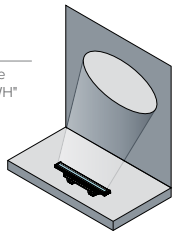

Network Topology - PowerSync™ Low Voltage

PowerSync™ Topology 1 - Single Trunk Cable

Maximum Number of Interconnected Fixtures - Single Run			
Luminaire Length	LED Power	Max Leader Cable Length	Max Number of Luminaires
4ft (305mm)	4W	50m	16
	6W	30m	12

Refer to PowerSync™ installation manual for maximum distance information and typology options.
All connectorised options in North America are limited to 12.8A branch circuit load.
For non-continuous runs contact factory for details.

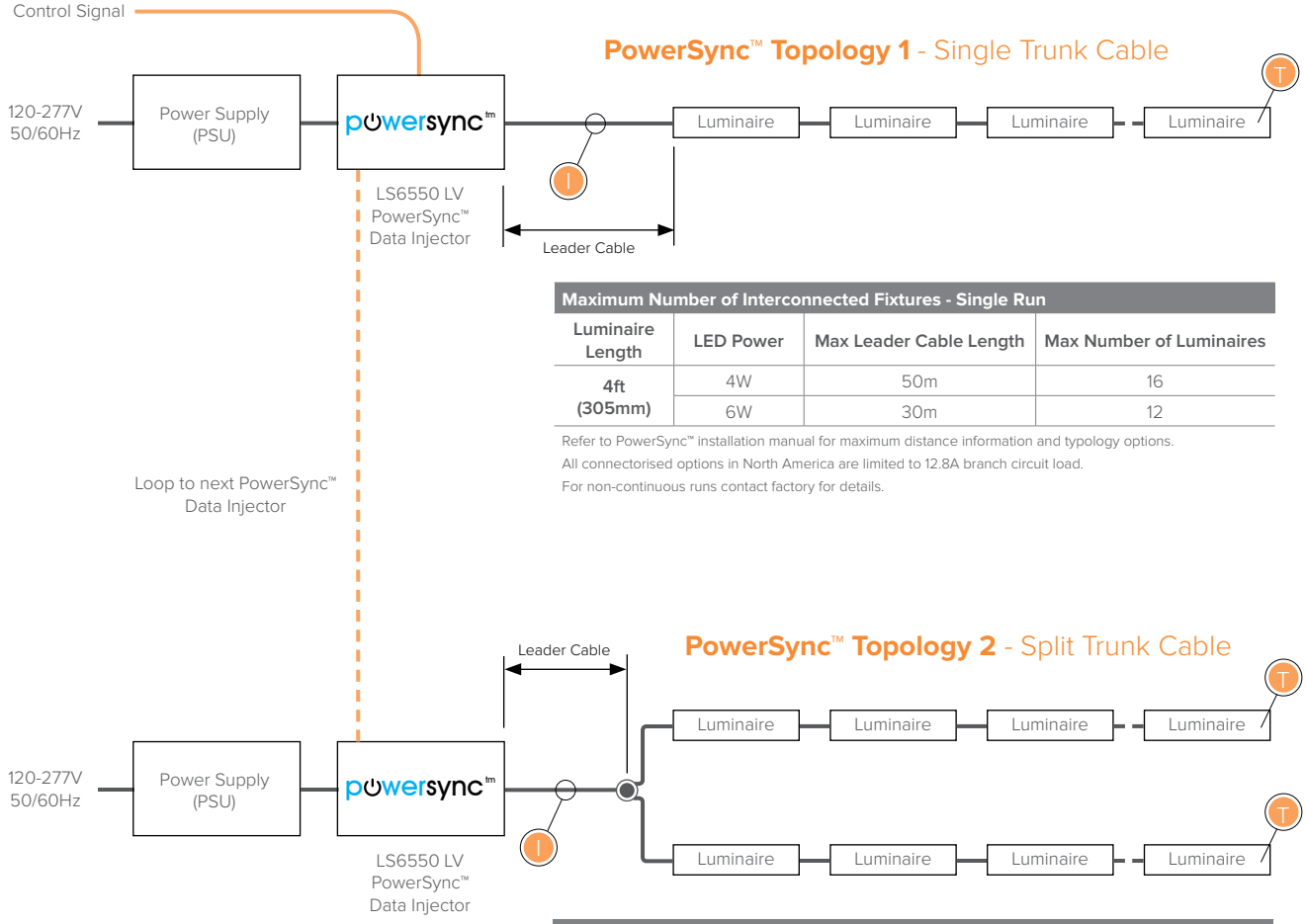

PowerSync™ Topology 2 - Split Trunk Cable

Maximum Number of Interconnected Fixtures - Parallel Run			
Luminaire Length	LED Power	Max Leader Cable Length	Max Number of Luminaires
4ft (305mm)	4W	5m	15 x 2
	6W	5m	12 x 2

Refer to PowerSync™ installation manual for maximum distance information and typology options.
All connectorised options in North America are limited to 12.8A branch circuit load.
For non-continuous runs contact factory for details.

Up to 30 luminaires per run under the following conditions:

- Refer to 'Maximum Circuit Load' table for circuit limitations
- Always observe local electrical codes for branch circuit current limitations

Maximum Circuit Load

Maximum Number of Interconnected Fixtures	
PSU Power	Maximum Number of Luminaires
600W	30 (4ft, 4W/ft)
480W	24 (4ft, 4W/ft)
320W	15 (4ft, 4W/ft)

Refer to PowerSync™ installation manual for maximum distance information and typology options.
All connectorised options in North America are limited to 12.8A branch circuit load.
For non-continuous runs contact factory for details.

T Terminator
Use PowerSync™ terminator, supplied with leader cable to terminate last luminaire in chain.

I Maximum Current
Through Cables & Connectors ≤12.8A.

Connection Type
Circuits are configured as connectorised. For details consult installation instructions and comply with local electrical codes.

NOTE: The above diagrams are intended to show electrical pathways between luminaires and ancillary device. These diagrams are not intended to show type or colour of cord / wire, luminaire input voltage rating, wire gauge or approved use of the cord / wire supplied with luminaires.

Quadralux Q6 & Q8

Merah Putih Bridge
Ambon, Indonesia

Commercial Production from **Q1 2018**

The Linealux L3 is a medium-power, architectural-grade luminaire that combines technology and performance in a stylish linear design. Available in white, colour changing and tunable white light engines, the Linealux L3 is packed with features including EasyGlow™ visual comfort and CoolDrive™ thermal management technologies. PowerSync™ allows for highly granular digital control via common protocols. Unique and flexible optics allow wide end-to-end spacing whist maintaining excellent uniformity.

Performance

Static White & Colour	Lumen Output (lm)	Efficacy (lm/W)	Peak Intensity (cd)
2,700 K (80 CRI)	4,138	-	-
3,000 K (80 CRI)	4,157	-	-
3,500 K (80 CRI)	4,527	-	-
4,000 K (80 CRI)	4,697	-	-
5,000 K (70 CRI)	4,927	-	-
Red	3,417	-	-
Green	6,186	-	-
Blue	2,143	-	-

Static white lumen output values are based on 12W/ft, 4ft luminaire with 6° lens.

Dynamic Colour	Lumen Output (lm)	Efficacy (lm/W)	Peak Intensity (cd)
RGBA	2,267	-	-
RGBW	2,637	-	-

Dynamic colour lumen output values based on 12W/ft, 4ft luminaire with 6° lens.

Tunable White	Lumen Output (lm)	Efficacy (lm/W)	Peak Intensity (cd)
2,700 K - 6,500 K	-	-	-

powersync™ easyglow™ cooldrive™

Performance

Beam Angles	**Light Engine**	**Beam Angles**
	Static White & Single Colour	6°, 15°, 30°, 45°, 60°, 40° x 10°, 40° x 20°, 60° x 10°, 60° x 20°
	Dynamic Colour	15°, 30°, 45°, 60°, 40° x 10°, 40° x 20°, 60° x 10°, 60° x 20°
	Tunable White	6°, 15°, 30°, 45°, 60°, 40° x 10°, 40° x 20°, 60° x 10°, 60° x 20°

Electrical

LED Power	5W/ft (ASHRAE) I 12W/ft
Consumption	15W/ft maximum for 12W/ft
Lifetime (L70)	>60,000hrs (B10, L70, TM21)
Input Voltage	120-277V, 50/60Hz
Thermal Management	CoolDrive™ onboard thermal monitoring and control.

Control

Interface	Lumascape PowerSync™
Protocols	DMX/RDM, Artnet, PWM[1], 0-10V (sink or source)[1] Some protocols require additional hardware. For details and for other available protocols contact factory. 1. Not available for Colour Changing
PWM Frequency	2,000Hz flicker free dimming to 0.1%
Systems	Range of third-party controllers

Physical

Housing	Die cast marine grade aluminum, tempered glass lens
Finish	Superior 9-step powder-coating process, including marine epoxy undercoat and polyester top coat.
Installation	Surface-mounted with galvanic isolator
Adjustable	Multi-positional, constant torque locking hinges
Ambient Operating Temperature	-40°C to 50°C (-40°F to 122°F)
Surface Temperature	≤50°C (122°F)
Weight	1' section - 0.9kg (2.0lb)

Certification & Compliance

IP Rating	IP66 / IP67
IK Rating	IK6 (pending)
Vibration Resistance	3G Rating (ANSI C136.31)
Environment	Dry, Damp, Wet locations
Certifications	ETL, CE, RCM, CCC (Pending)

Luminaire Dimensions

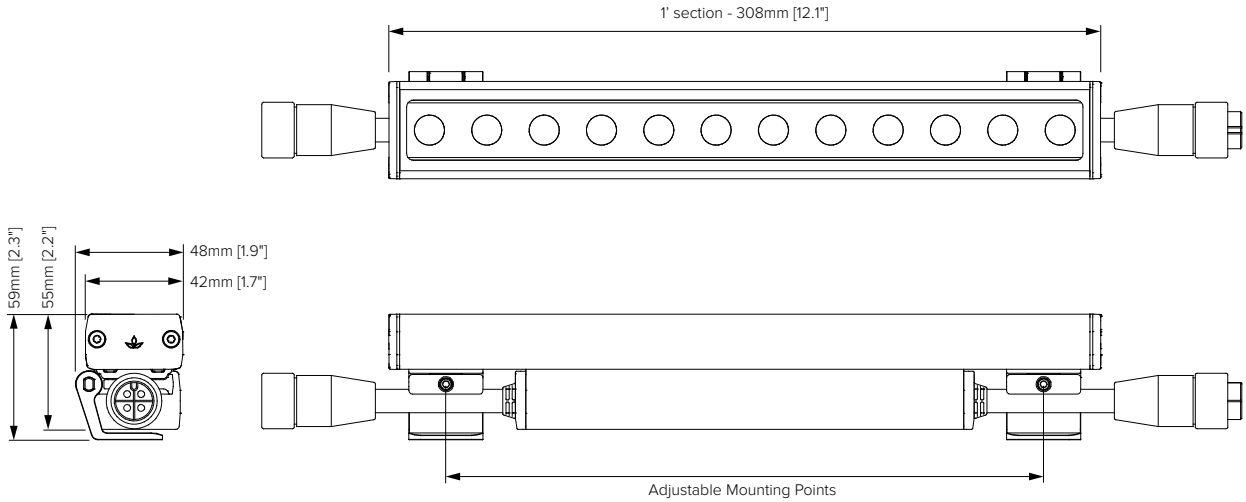

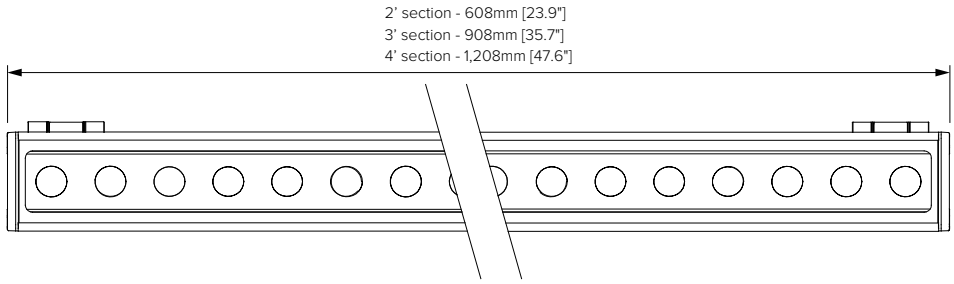

Luminaire Rotation

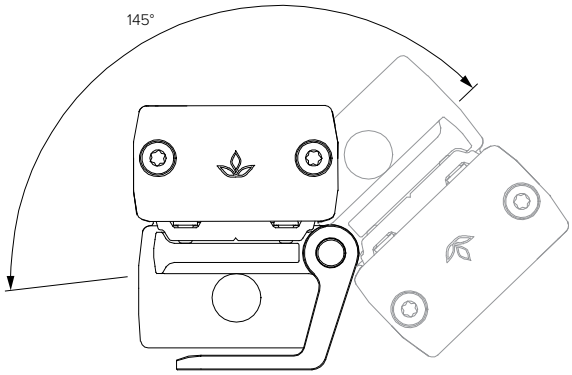

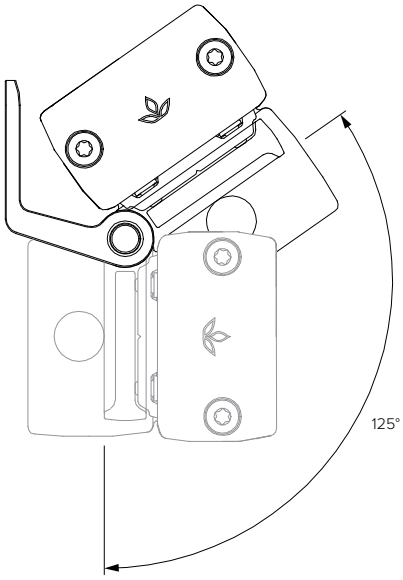

LS9030 [ ] [ ] [ ] [ ] [ ] [ ] [ ] [ ] [ ] [ ]

Power	Code
5W/ft	05W[1]
12W/ft	12W

(1) ASHRAE Version

Static White & Colour	Code
2,700 K (80 CRI)	827
3,000 K (80 CRI)	830
3,500 K (80 CRI)	835
4,000 K (80 CRI)	840
5,000 K (70 CRI)	750
Red	RED
Green	GRN
Blue	BLU

Beam	Code
6°	VN
15°	NM
30°	ME
45°	WD
60°	WF
60° x 10°	LH
40° x 10°	NH
40° x 20°	MH
60° x 20°	WH

Dynamic Colour	Code
RGBA	4CA
RGBW	4CW

Beam	Code
15°	NM
30°	ME
45°	WD
60°	WF
60° x 10°	LH
40° x 10°	NH
40° x 20°	MH
60° x 20°	WH

Tunable White	Code
2,700 K - 6,500 K	2WT

Beam	Code
6°	VN
15°	NM
30°	ME
45°	WD
60°	WF
60° x 10°	LH
40° x 10°	NH
40° x 20°	MH
60° x 20°	WH

Connection Type	Code
Flexible cable, single entry, for hard wired installations	84
Flexible cable, double entry, for hard wired installations	83
Flexible cable, single entry, for connectorised installations	77
Flexible cable, double entry, for connectorised installations	73

For other cable entry options contact factory.

Length	Code
1' - 308mm (12.1")	1
2' - 608mm (23.9")	2
3' - 908mm (35.7")	3
4' - 1,208mm (47.6")	4

Mounting	Code
Adjustable Bracket	A
Fixed Bracket	B

Input Voltage	Code
110-240V, 50/60Hz	01[1]
120-277V, 50/60Hz	09[2]

(1) International market
(2) North American market

Control	Code
Non-Dim	ND[1]
Powersync™	PS[2]

(1) For single colour, non-dimming applications only.
(2) Required for all dimming and colour changing applications. LS6540 Data Injector required - order separately

Finish	Code
Black	BL
Anthracite Grey	AG
Basalt Grey	BT
Anodic Silver	SL
White	WT
Dark Bronze	DB
Latte	LT
Dark Aluminum	DA
Custom RAL	CC[1]

(1) Please provide RAL colour.

Luminaire Gap	Code
End-To-End (ETE)	000[1]
0.3m (1') Gap	001
0.6m (2') Gap	002
0.9m (3') Gap	003
1.8m (6') Gap	006

(1) Default - Minimum length for ETE connection.

Beam Orientations

Beam Orientation for the "NH", "MH" and "WH" optical system

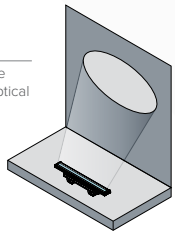

Network Topology - PowerSync™ Dimmable

PowerSync™ Topology 1 - Single Trunk Cable

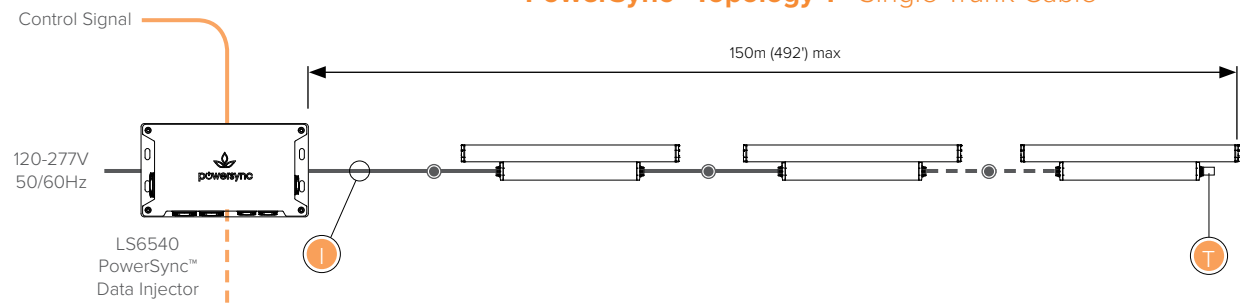

PowerSync™ Topology 2 - Split Trunk Cable

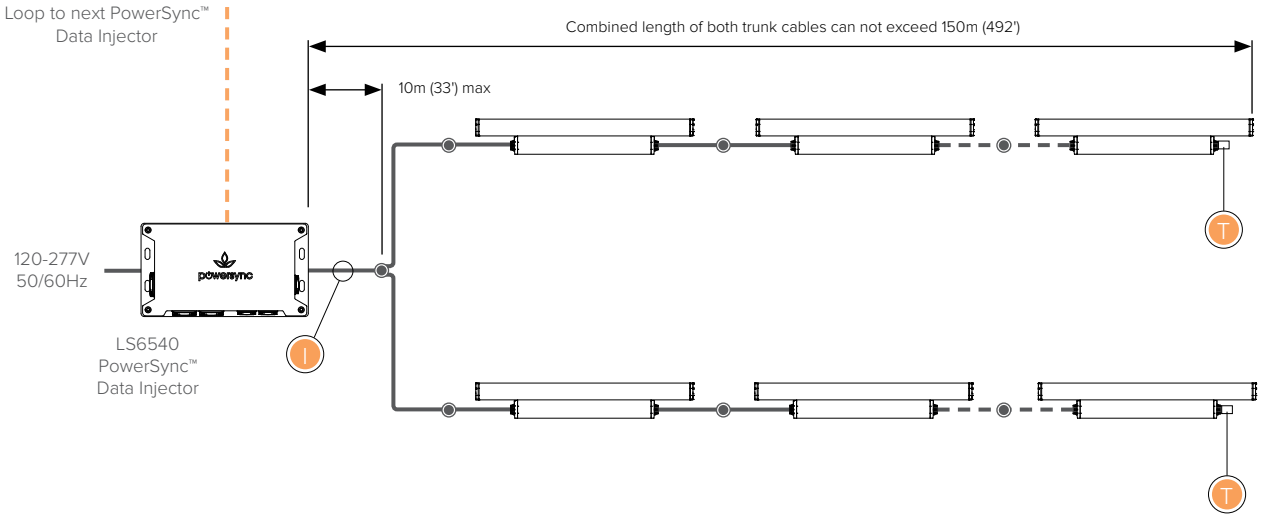

Up to -- luminaires per run under the following conditions:

- Max total cable run length 150m (492) in up to two trunk cables
- Refer to 'Maximum Circuit Load' table for circuit limitations
- Always observe local electrical codes for branch circuit current limitations
- For run length in excess of 30m (100') use a wire size not lower than 14 AWG

Maximum Circuit Load

Maximum Number of Interconnected Fixtures							
Luminaire Length	LED Power	120V		240V		277V	
		12.8A	16A	12.8A	16A	12.8A	16A
1ft (305mm)	5W	45	45	45	45	45	45
	12W	45	45	45	45	45	45
2ft (610mm)	5W	45	45	45	45	45	45
	12W	40	45	45	45	45	45
3ft (915mm)	5W	45	45	45	45	45	45
	12W	26	35	45	45	45	45
4ft (1,220mm)	5W	42	42	45	45	45	45
	12W	20	26	40	45	45	45

Refer to PowerSync™ installation manual for maximum distance information and typology options.
All connectorised options in North America are limited to 12.8A branch circuit load.
For non-continuous runs contact factory for details.

Terminator
Use PowerSync™ terminator, supplied with leader cable to terminate last luminaire in chain.

Maximum Current
≤16.0A through cables and connectors supplied by Lumascape
≤12.8A applies to connectorised installations in North America

Connection Type
Circuits can be configured as either connectorised or hardwired. For details consult installation instructions and comply with local electrical codes.

NOTE: The above diagrams are intended to show electrical pathways between luminaires and ancillary device. These diagrams are not intended to show type or colour of cord / wire, luminaire input voltage rating, wire gauge or approved use of the cord / wire supplied with luminaires.

Network Topology - Non-Dimmable

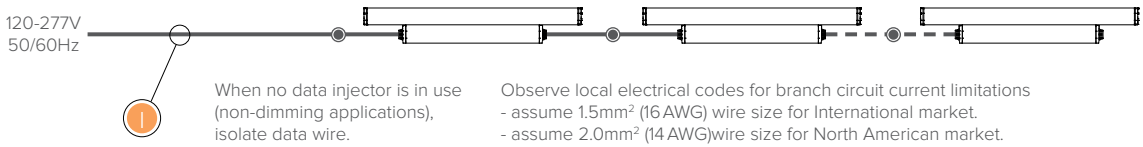

Up to 45 luminaires per run under the following conditions:

- Refer to 'Maximum Circuit Load' table for circuit limitations
- Always observe local electrical codes for branch circuit current limitations

Maximum Current

≤16.0A through cables and connectors supplied by Lumascape
≤12.8A applies to connectorised installations in North America

Connection Type

Circuits can be configured as either connectorised or hardwired. For details consult installation instructions and comply with local electrical codes.

Maximum Circuit Load

Maximum Number of Interconnected Fixtures							
Luminaire Length	LED Power	120V		240V		277V	
		12.8A	16A	12.8A	16A	12.8A	16A
1ft (305mm)	5W	45	45	45	45	45	45
	12W	45	45	45	45	45	45
2ft (610mm)	5W	45	45	45	45	45	45
	12W	40	45	45	45	45	45
3ft (915mm)	5W	45	45	45	45	45	45
	12W	26	35	45	45	45	45
4ft (1,220mm)	5W	42	42	45	45	45	45
	12W	20	26	40	45	45	45

Refer to PowerSync™ installation manual for maximum distance information and typology options.
All connectorised options in North America are limited to 12.8A branch circuit load.
For non-continuous runs contact factory for details.

NOTE: The above diagrams are intended to show electrical pathways between luminaires and ancillary device. These diagrams are not intended to show type or colour of cord / wire, luminaire input voltage rating, wire gauge or approved use of the cord / wire supplied with luminaires.

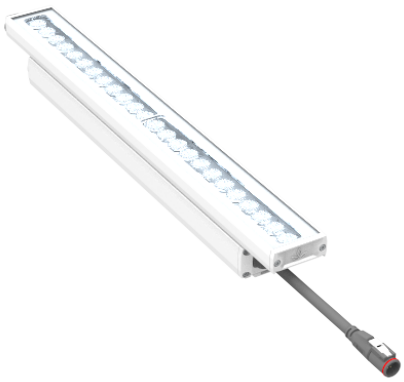

The Linealux L5 is a high power architectural grade luminaire that combines technology and performance in a stylish linear form factor. Available in white, colour changing and tunable white light engines, the Linealux L5 is packed with features including EasyGlow™ visual comfort and CoolDrive™ thermal management technologies. PowerSync™ allows for highly granular digital control via common protocols. Unique and flexible optics allow wide end-to-end spacing whist maintaining excellent uniformity. Lighting professionals now have greater creative flexibility with the choice of designer* and standard LED options.

*Reduces colour-over-angle separation, fewer striations in the beam and shorter blending distances.

Performance

Static White & Colour	Lumen Output (lm)	Efficacy (lm/W)	Peak Intensity (cd)
2,700 K (80 CRI)	8,276	79.4	171,060
3,000 K (80 CRI)	8,315	81.5	172,669
3,500 K (80 CRI)	9,054	90.7	188,017
4,000 K (80 CRI)	9,503	92.7	195,039
5,000 K (70 CRI)	9,854	96.6	198,940
Red	3,417	63.2	117,933
Green	6,186	62.3	210,476
Blue	2,143	19.8	73,460

Static white lumen output values are based on 22W/ft, 4ft luminaire with 10° standard lens.
Single colour lumen output values are based on 22W/ft, 4ft luminaire with 6° designer lens.

Dynamic Colour	Lumen Output (lm)	Efficacy (lm/W)	Peak Intensity (cd)
RGBA	3,970	42.1	108,054
RGBW	4,619	47.1	116,730
RGB(1)	-	-	-

Dynamic colour lumen output values based on 22W/ft, 4 ft luminaire with 6° designer lens.
(1) RGB available on request.

Tunable White	Lumen Output (lm)	Efficacy (lm/W)	Peak Intensity (cd)
2,700 K - 6,500 K	6,310 (4,430 K)	61.1	28,771

Tunable white lumen output values based on 22W/ft, 4ft luminaire with 6° designer lens with all channels at 100%.

powersync™ easyglow™ cooldrive™

Performance

	Light Engine	Series	Beam Angles
Beam Angles	Static White & Single Colour	Standard	10°, 15°, 30°, 45°, 40° x 10°, 40° x 20°, 60° x 20°
		Designer (1)	6°, 15°, 30°, 45°, 60°, 60° x 10°, 40° x 10°, 40° x 20°, 60° x 20°
	Dynamic Colour	Designer (1)	6°, 15°, 30°, 45°, 60°, 60° x 10°, 40° x 10°, 40° x 20°, 60° x 20°
	Tunable White	Designer (1)	6°, 15°, 30°, 45°, 60°, 60° x 10°, 40° x 10°, 40° x 20°, 60° x 20°

(1) Significantly reduces colour-over-angle separation, fewer striations in the beam and shorter blending distances.

Electrical

LED Power	15W/ft, 22W/ft
Consumption	18W/ft, 25W/ft maximum
Lifetime (L70)	>60,000hrs (B10, L70, TM21)
Input Voltage	120-277V, 50/60Hz
Thermal Management	CoolDrive™ onboard thermal monitoring and control.

Control

Interface	Lumascape PowerSync™
Protocols	DMX/RDM, Artnet, PWM(1), 0-10V (sink or source)(1) Some protocols require additional hardware. For details and for other available protocols contact factory. 1. Not available for Colour Changing
PWM Frequency	2,000Hz flicker free dimming to 0.1%
Systems	Range of third-party controllers

Physical

Housing	Die cast marine grade aluminum, tempered glass lens, isolated stainless steel fasteners, constant torque adjustable mounting bracket (lockable and reversible)
Finish	Superior 9-step powder-coating process, including marine epoxy undercoat and polyester top coat.
Installation	Surface-mounted with galvanic isolator
Adjustable	Multi-positional, constant torque locking hinges
Ambient Operating Temperature	-40°C to 50°C (-40°F to 122°F)
Surface Temperature	≤50°C (122°F) | 22 W/ft
Weight	4' section - 6.7kg (14.8lb)

Certification & Compliance

IP Rating	IP66 / IP67
IK Rating	IK6
Vibration Resistance	3G Rating (ANSI C136.31)
Environment	Dry, Damp, Wet locations
Certifications	ETL, CE, RCM, CCC

Luminaire Dimensions

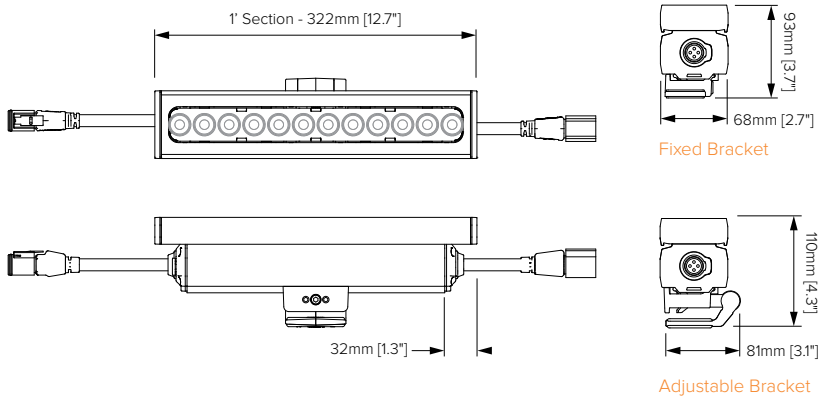

Luminaire Rotation

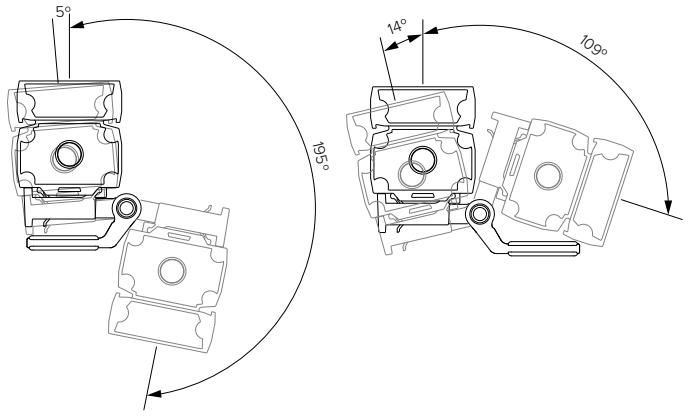

Mounting & Luminaire Length

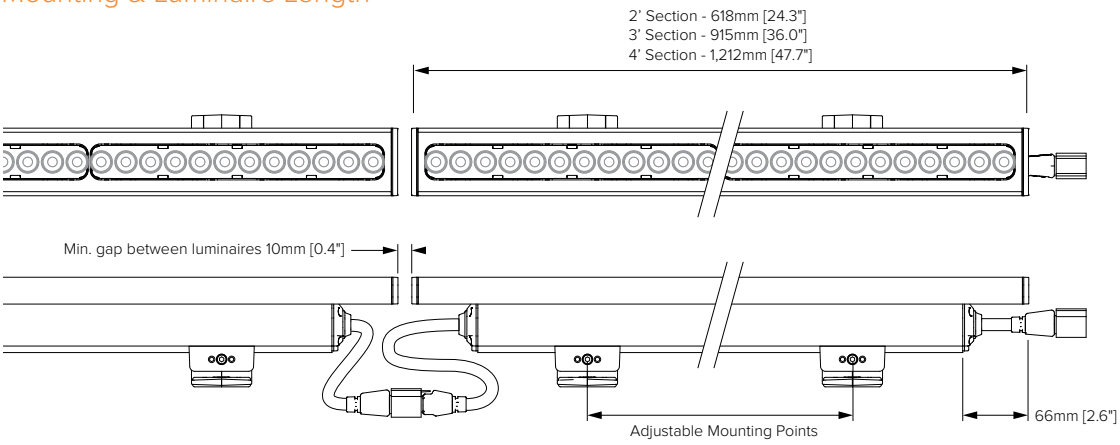

LS9050												

Power	Code
15W/ft	15
22W/ft	22

Series	Code
Designer	D
Standard	S

Static White & Colour	Code
2,700 K (80 CRI)	827
3,000 K (80 CRI)	830
3,500 K (80 CRI)	835
4,000 K (80 CRI)	840
5,000 K (70 CRI)	750
Red	RED
Green	GRN
Blue	BLU

Standard	Designer	Code
N/A	6°	VN
10°	N/A	NR
15°	15°	NM
30°	30°	ME
45°	45°	WD
N/A	60°	WF
N/A	60° x 10°	LH
40° x 10°	40° x 10°	NH
40° x 20°	40° x 20°	MH
60° x 20°	60° x 20°	WH

Dynamic Colour	Code
RGBA	4CA
RGBW	4CW
RGB	RGB(1)

(1) Available on request

Designer	Code
6°	VN
15°	NM
30°	ME
45°	WD
60°	WF
60° x 10°	LH
40° x 10°	NH
40° x 20°	MH
60° x 20°	WH

Tunable White	Code
2,700 K - 6,500 K	2WT

Designer	Code
6°	VN
15°	NM
30°	ME
45°	WD
60°	WF
60° x 10°	LH
40° x 10°	NH
40° x 20°	MH
60° x 20°	WH

Connection Type	Code
Flexible cable, single entry, for hard wired installations	84
Flexible cable, double entry, for hard wired installations	83
Flexible cable, single entry, for connectorised installations	77
Flexible cable, double entry, for connectorised installations	73
Hookup wire and 1/2" NPT, single entry, for hard wired installations	82(1)
Hookup wire and 1/2" NPT, double entry, for hard wired installations	86(1)

(1) North American market only

For other cable entry options contact factory.

Length	Code
1' - 322mm (12.7")	1
2' - 618mm (24.3")	2
3' - 915mm (36.0")	3
4' - 1,212mm (47.7")	4

Mounting	Code
Adjustable Bracket	A
Fixed Bracket	B

Input Voltage	Code
110-240V, 50/60Hz	01(1)
120-277V, 50/60Hz	09(2)

(1) International market

(2) North American market

Control	Code
Non-Dim	ND(1)
Powersync™	PS(2)

(1) For single colour, non-dimming applications only.

(2) Required for all dimming and colour changing applications. LS6540 Data Injector required - order separately

Finish	Code
Black	BL
Anthracite Grey	AG
Basalt Grey	BT
Anodic Silver	SL
White	WT
Dark Bronze	DB
Latte	LT
Dark Aluminum	DA
Custom RAL	CC(1)

(1) Please provide RAL colour.

Luminaire Gap	Code
End-To-End (ETE)	000(1)
0.3m (1') Gap	001
0.6m (2') Gap	002
0.9m (3') Gap	003
1.8m (6') Gap	006

(1) Default - Minimum length for ETE connection.

Beam Orientations

Beam Orientation for the "LH", "NH", "MH", "WH" and "WF" optical system

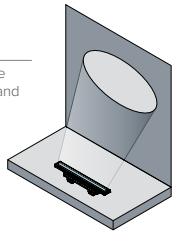

Linealux L5

Weston Milling Silos
Melbourne, Australia

Shielding & Glare Control

A variety of shielding and glare control options are available for the Linealux L5 Series. The images below depict the one foot version of the luminaire but glare control accessories are available from 1ft to 4ft in length to suit any base luminaires.

Visor Length	Code
External Shield / Visor 1-sided - 1'	LS6213
External Shield / Visor 1-sided - 2'	LS6214
External Shield / Visor 1-sided - 3'	LS6215
External Shield / Visor 1-sided - 4'	LS6216

Finish	Code
Black	BL
Anthracite Grey	AG
Basalt Grey	BT
Anodic Silver	SL
White	WT
Dark Bronze	DB
Latte	LT
Dark Aluminum	DA
Custom RAL	CC(1)

(1) Please provide RAL colour.

External Shield / Visor 1-sided

Visor Length	Code
External Shield / Visor 3-sided - 1'	LS6217
External Shield / Visor 3-sided - 2'	LS6218
External Shield / Visor 3-sided - 3'	LS6219
External Shield / Visor 3-sided - 4'	LS6220

Finish	Code
Black	BL
Anthracite Grey	AG
Basalt Grey	BT
Anodic Silver	SL
White	WT
Dark Bronze	DB
Latte	LT
Dark Aluminum	DA
Custom RAL	CC(1)

(1) Please provide RAL colour.

External Shield / Visor 3-sided

Louvre Length	Code
External / Slatted Louvre - 1'	LS6209
External / Slatted Louvre - 2'	LS6210
External / Slatted Louvre - 3'	LS6211
External / Slatted Louvre - 4'	LS6212

Finish	Code
Black	BL
Anthracite Grey	AG
Basalt Grey	BT
Anodic Silver	SL
White	WT
Dark Bronze	DB
Latte	LT
Dark Aluminum	DA
Custom RAL	CC(1)

(1) Please provide RAL colour.

External / Slatted Louvre

LS6147 Link Key

Lighting designers and architects can take advantage of the Lumascape Link Key to interconnect two or more L5 luminaires. Therefore it has never been easier to double, triple or even quadruple the lumen output for an application.

Side View

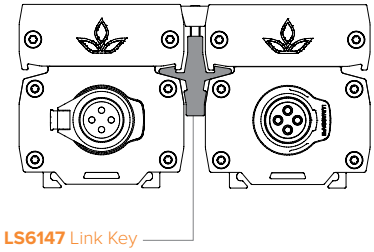

Clean Installation

Luminaires joined with a Link Key can be daisy chained with one cable and individually controlled via Lumascape PowerSync™.

Reversible Mounting Bracket

The Linealux L5 series comes with adjustable and reversible, constant torque mounting bracket. This allows for the luminaire to be mounted to virtually any position. A wide variety of mounting accessories is also available for the Linealux L5 series.

Vertical Mounting

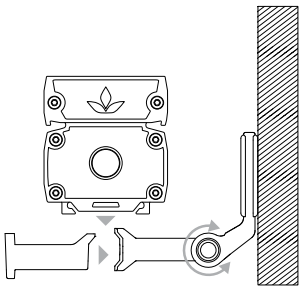

Horizontal Mounting

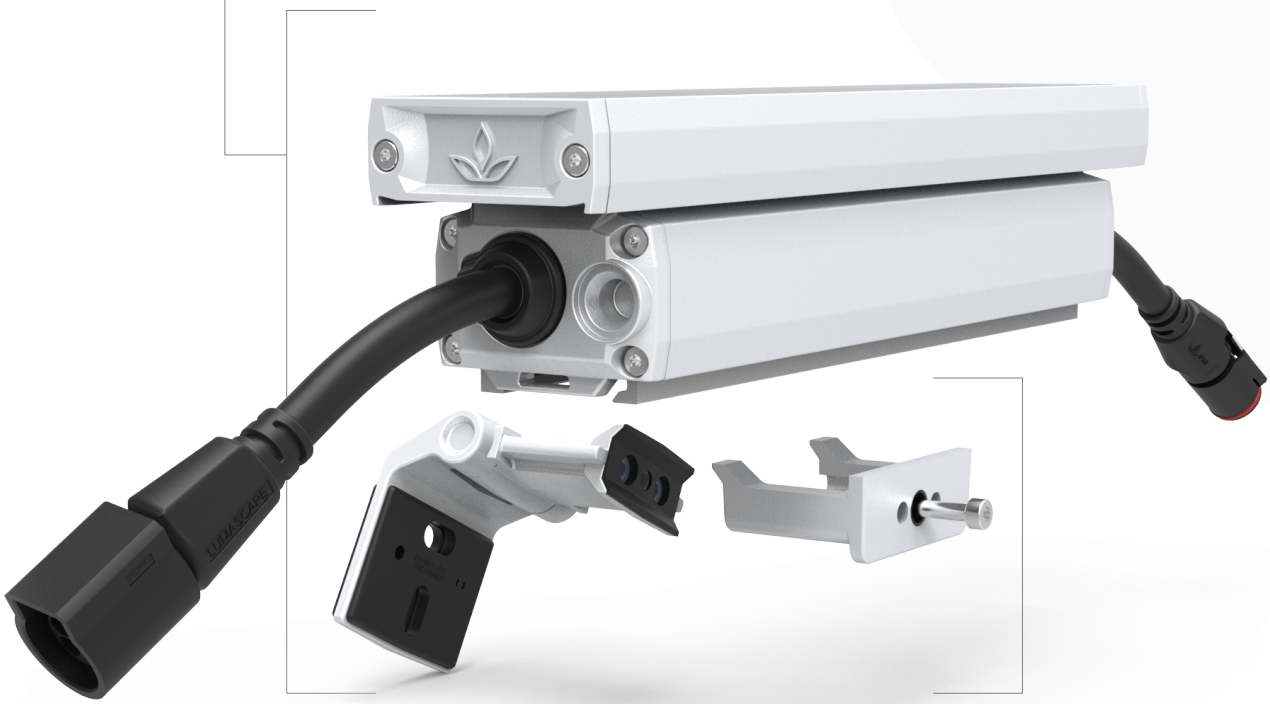

Network Topology - PowerSync™ Dimmable

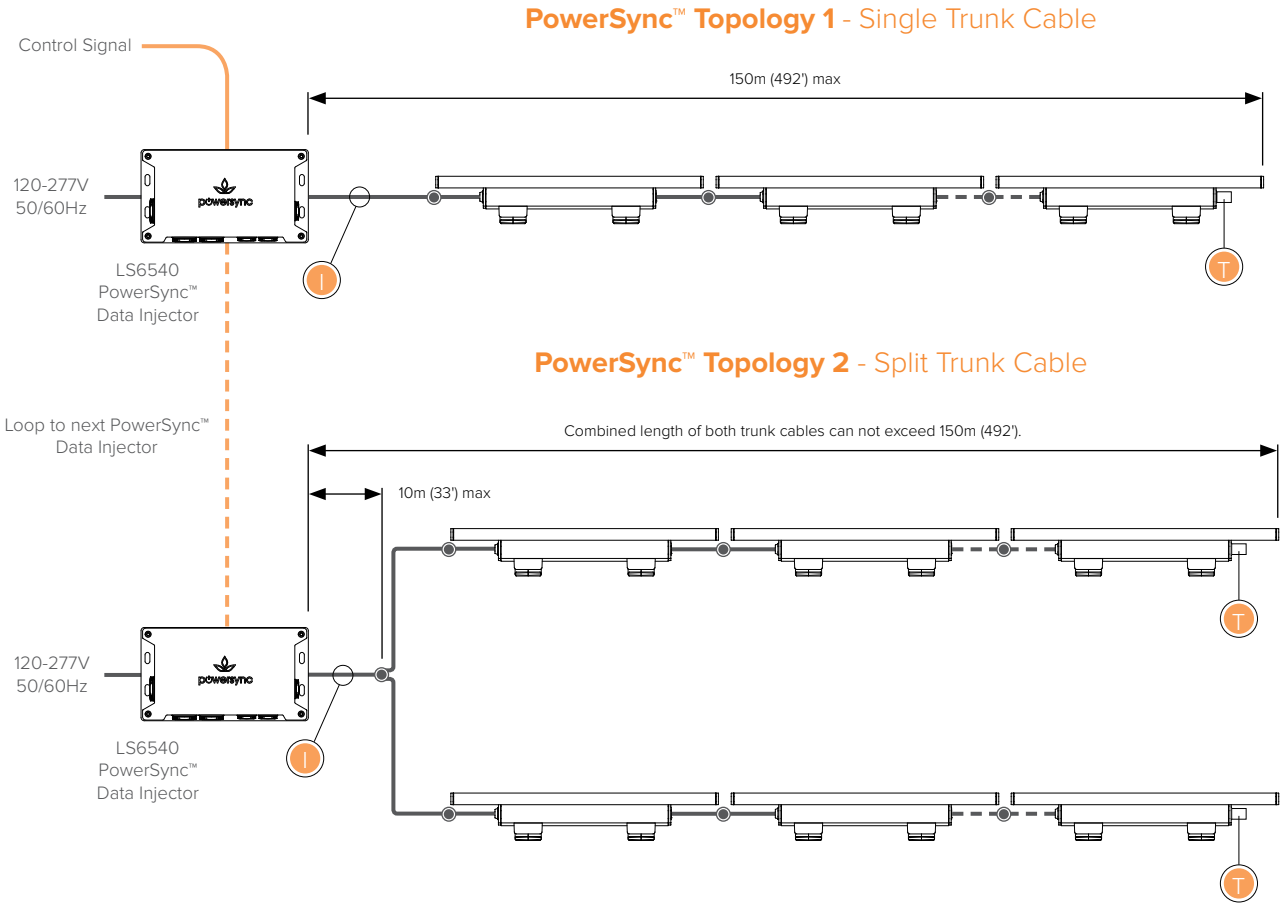

Up to 45 luminaires per run under the following conditions:

- Max total cable run length 150m (492') in up to two trunk cables
- Refer to 'Maximum Circuit Load' table for circuit limitations
- Always observe local electrical codes for branch circuit current limitations
- For run length in excess of 30m (100') use a wire size not lower than 14 AWG

Terminator
Use PowerSync™ terminator, supplied with leader cable to terminate last luminaire in chain.

Maximum Current
≤16.0A through cables and connectors supplied by Lumascape
≤12.8A applies to connectorised installations in North America

Connection Type
Circuits can be configured as either connectorised or hardwired. For details consult installation instructions and comply with local electrical codes.

Maximum Circuit Load

Maximum Number of Interconnected Fixtures							
Luminaire Length	LED Power	120V		240V		277V	
		12.8A	16A	12.8A	16A	12.8A	16A
1ft (305mm)	15W	45	45	45	45	45	45
	22W	41	45	45	45	45	45
2ft (610mm)	15W	40	45	45	45	45	45
	22W	28	38	45	45	45	45
3ft (915mm)	15W	26	35	45	45	45	45
	22W	19	25	38	45	44	45
4ft (1,220mm)	15W	20	26	40	45	45	45
	22W	14	19	28	38	33	44

Refer to PowerSync™ installation manual for maximum distance information and typology options.
All connectorised options in North America are limited to 12.8A branch circuit load.
For non-continuous runs contact factory for details.

NOTE: The above diagrams are intended to show electrical pathways between luminaires and ancillary device. These diagrams are not intended to show type or colour of cord / wire, luminaire input voltage rating, wire gauge or approved use of the cord / wire supplied with luminaires.

Network Topology - Non-Dimmable

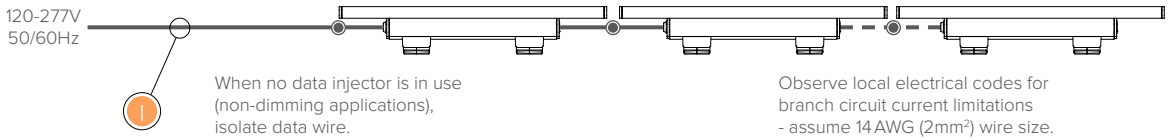

Up to 45 luminaires per run under the following conditions:

- Refer to 'Maximum Circuit Load' table for circuit limitations
- Always observe local electrical codes for branch circuit current limitations

Maximum Current

≤16.0A through cables and connectors supplied by Lumascape
≤12.8A applies to connectorised installations in North America

Connection Type

Circuits can be configured as either connectorised or hardwired. For details consult installation instructions and comply with local electrical codes.

Maximum Circuit Load

Maximum Number of Interconnected Fixtures

Luminaire Length	LED Power	120V		240V		277V	
		12.8A	16A	12.8A	16A	12.8A	16A
1ft (305mm)	15W	45	45	45	45	45	45
	22W	41	45	45	45	45	45
2ft (610mm)	15W	40	45	45	45	45	45
	22W	28	38	45	45	45	45
3ft (915mm)	15W	26	35	45	45	45	45
	22W	19	25	38	45	44	45
4ft (1,220mm)	15W	20	26	40	45	45	45
	22W	14	19	28	38	33	44

Refer to PowerSync™ installation manual for maximum distance information and typology options.
All connectorised options in North America are limited to 12.8A branch circuit load.
For non-continuous runs contact factory for details.

NOTE: The above diagrams are intended to show electrical pathways between luminaires and ancillary device. These diagrams are not intended to show type or colour of cord / wire, luminaire input voltage rating, wire gauge or approved use of the cord / wire supplied with luminaires.

Commercial Production from **Q1 2018**

The Vestalux V1 is a high performance exterior grade architectural outliner featuring a flat glass diffuser. Designed for direct view, the luminaire has excellent light blending properties, ensuring uniformity when it comes to colour brightness and blending. Despite its compact, low profile form factor, the Vestalux V1 packs a punch in both light output and technical features.

Control, addressing and monitoring is via full DMX/RDM through the Lumascape PowerSync™ Gateway. The Vestalux V1 is manufactured from high grade extruded aluminium and is available in an anodised finish. With its low profile, including cable entries and mounting accessories, the Vestalux V1 is ideal for tucking into tight spaces. RDM addressing means that fixtures can be installed in any order and swapped in and out at will. Addressing can be done prior to, or after installation. Remote, off-site monitoring of every single fixture in the system is also possible.

Performance

Static White & Colour	Lumen Output (lm)	Efficacy (lm/W)	Peak Intensity (cd)
2,700 K (80 CRI)	-	-	-
3,000 K (80 CRI)	-	-	-
3,500 K (80 CRI)	-	-	-
4,000 K (80 CRI)	960	-	-
5,000 K (70 CRI)	-	-	-
Red	-	-	-
Green	-	-	-
Blue	-	-	-

Static white lumen output values are based on 5W/ft, 4ft luminaire.

Dynamic Colour	Lumen Output (lm)	Efficacy (lm/W)	Peak Intensity (cd)
RGBA	-	-	-
RGBW with Royal Blue	-	-	-

Dynamic colour lumen output values based on 5W/ft, 4ft luminaire.

Tunable White	Lumen Output (lm)	Efficacy (lm/W)	Peak Intensity (cd)
2,700 K - 6,500 K	-	-	-

Tunable white lumen output values based on 5W/ft, 4ft luminaire with all channels at 100%.

powersync™ easyglow™ cooldrive™

Electrical

LED Power	4W/ft or 6W/ft
Consumption	≤7W/ft maximum
Lifetime (L70)	>60,000hrs (B10, L70, TM21)
Input Voltage	Low Voltage 48V DC
Thermal Management	CoolDrive™ onboard thermal monitoring and control.

Control

Interface	Lumascape PowerSync™
Protocols	DMX/RDM, Artnet, PWM[1], 0-10 V (sink or source)[1] Some protocols require additional hardware. For details and for other available protocols contact factory. 1. Not available for Colour Changing
PWM Frequency	1,600Hz flicker free dimming to 0.1%
Control Resolution	100mm, 300mm, luminiare length configurable control resolution
Systems	Range of third-party controllers

Physical

Housing	Extruded marine grade aluminium, tempered glass lens
Finish	Anodised Aluminium, or superior 9-step powder-coating process, including marine epoxy undercoat and polyester top coat.
Installation	Surface-mounted
Adjustable	A range of mounting options are available
Ambient Operating Temperature	-40°C to 50°C (-40°F to 122°F)
Surface Temperature	35°C (≤95°F)
Weight	4' section - 1.1kg (2.4lb)

Certification & Compliance

IP Rating	IP66 / IP67
IK Rating	IK6 (pending)
Environment	Dry, Damp, Wet locations
Certifications	ETL, CE, RCM, CCC (pending)

Luminaire Dimensions

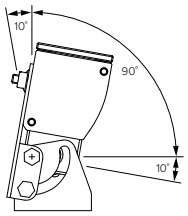

1' Section - 303mm [11.9"]
2' Section - 603mm [23.7"]
3' Section - 903mm [35.6"]
4' Section - 1,203mm [47.4"]
5' Section - 1,503mm [59.2"]

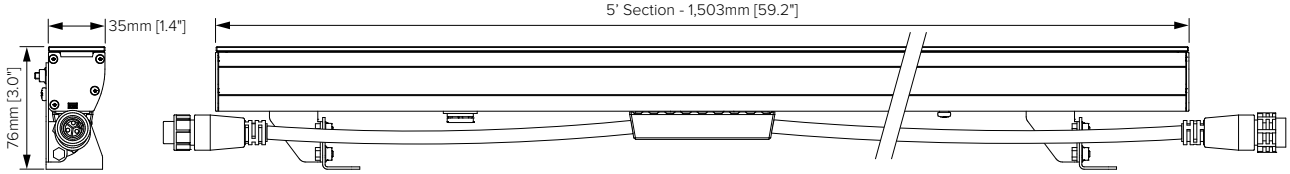

Network Topology - PowerSync™ Low Voltage

PowerSync™ Topology 1 - Single Trunk Cable

Maximum Number of Interconnected Fixtures - Single Run			
Luminaire Length	LED Power	Max Leader Cable Length	Max Number of Luminaires
4ft (305mm)	4W	50m	16
	6W	30m	12

Refer to PowerSync™ installation manual for maximum distance information and typology options.
All connectorised options in North America are limited to 12.8A branch circuit load.
For non-continuous runs contact factory for details.

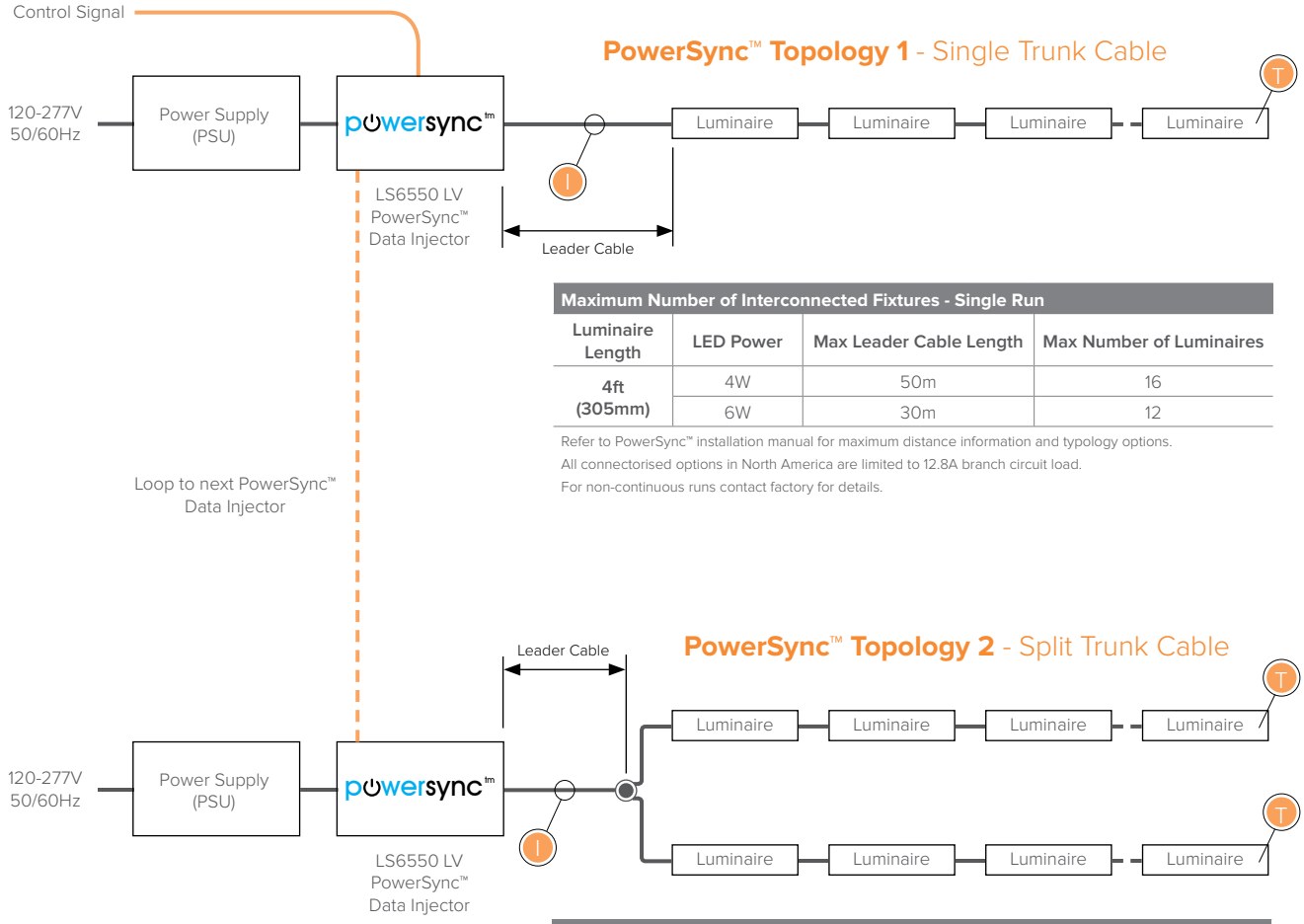

PowerSync™ Topology 2 - Split Trunk Cable

Maximum Number of Interconnected Fixtures - Parallel Run			
Luminaire Length	LED Power	Max Leader Cable Length	Max Number of Luminaires
4ft (305mm)	4W	5m	15 x 2
	6W	5m	12 x 2

Refer to PowerSync™ installation manual for maximum distance information and typology options.
All connectorised options in North America are limited to 12.8A branch circuit load.
For non-continuous runs contact factory for details.

Up to 30 luminaires per run under the following conditions:

- Refer to 'Maximum Circuit Load' table for circuit limitations
- Always observe local electrical codes for branch circuit current limitations

T Terminator
Use PowerSync™ terminator, supplied with leader cable to terminate last luminaire in chain.

I Maximum Current
Through Cables & Connectors ≤12.8A.

Connection Type
Circuits are configured as connectorised. For details consult installation instructions and comply with local electrical codes.

Maximum Circuit Load

Maximum Number of Interconnected Fixtures	
PSU Power	Maximum Number of Luminaires
600W	30 (4ft, 4W/ft)
480W	24 (4ft, 4W/ft)
320W	15 (4ft, 4W/ft)

Refer to PowerSync™ installation manual for maximum distance information and typology options.
All connectorised options in North America are limited to 12.8A branch circuit load.
For non-continuous runs contact factory for details.

NOTE: The above diagrams are intended to show electrical pathways between luminaires and ancillary device. These diagrams are not intended to show type or colour of cord / wire, luminaire input voltage rating, wire gauge or approved use of the cord / wire supplied with luminaires.

LS9015				G		C						

Power	Code
4W/ft	04W
6W/ft	06W

Static White & Colour	Code
2,700 K (80 CRI)	827
3,000 K (80 CRI)	830
3,500 K (80 CRI)	835
4,000 K (80 CRI)	840
5,000 K (70 CRI)	750
Red	RED
Green	GRN
Blue	BLU

Dynamic Colour	Code
RGBA	4CA
RGBW with Royal Blue	4BW

Tunable White	Code
2,700 K - 6,500 K	2WT

Cable Entry	Code
Flexible cable, single entry, for connectorised installations	67
Flexible cable, double entry, for connectorised installations	63

Optics	Code
Flat Glass	G

Length	Code
1' - 303mm (11.9")	1
2' - 603mm (23.7")	2
3' - 903mm (35.6")	3
4' - 1,203mm (47.4")	4
5' - 1,503mm (59.2")	5

Housing	Code
Feature Curve	C

Control Resolution	Code
100mm (3.9")	3
300mm (11.8")	4

Mounting	Code
Adjustable Bracket	A
Fixed Bracket	B

Input Voltage	Code
48V DC	07[1]
48V DC	13[2]

(1) International market
(2) North American market

Control	Code
Non-Dim	ND[1]
Powersync™	PS[2]

(1) For single colour, non-dimming applications only.
(2) Required for all dimming and colour changing applications. LS6550 Data Injector required - order separately

Finish	Code
Anodised Clear	AC

Other finishes available on request. Minimum order quantities apply.

Luminaire Gap	Code
End-To-End (ETE)	000[1]
0.3m (1') Gap	001
0.6m (2') Gap	002
0.9m (3') Gap	003
1.8m (6') Gap	006

(1) Default - Minimum length for ETE connection.

Commercial Production from **Q1 2018**

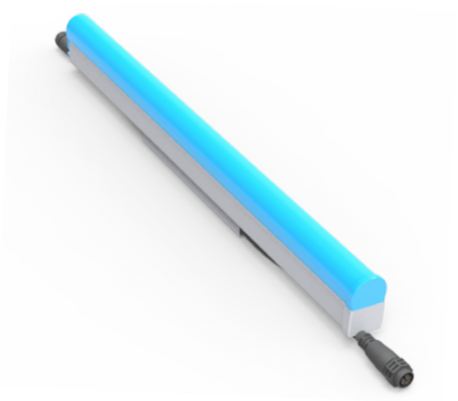

The Vestalux V2 is a high performance exterior grade architectural outliner featuring a UV strengthened polycarbonate tube diffuser. Designed for direct view, the luminaire has excellent light blending properties, ensuring uniformity when it comes to colour brightness and blending. Despite its compact, low profile form factor, the Vestalux V2 packs a punch in both light output and technical features.

Control, addressing and monitoring is via full DMX/RDM through the Lumascape PowerSync™ Gateway. The Vestalux V2 is manufactured from high grade extruded aluminium and is available in an anodised finish. With its low profile, including cable entries and mounting accessories, the Vestalux V2 is ideal for tucking into tight spaces. RDM addressing means that fixtures can be installed in any order and swapped in and out at will. Addressing can be done prior to, or after installation. Remote, off-site monitoring of every single fixture in the system is also possible.

Performance

Static White & Colour	Lumen Output (lm)	Efficacy (lm/W)	Peak Intensity (cd)
2,700 K (80 CRI)	-	-	-
3,000 K (80 CRI)	-	-	-
3,500 K (80 CRI)	-	-	-
4,000 K (80 CRI)	960	-	-
5,000 K (70 CRI)	-	-	-
Red	-	-	-
Green	-	-	-
Blue	-	-	-

Static white lumen output values are based on 5W/ft, 4ft luminaire.

Dynamic Colour	Lumen Output (lm)	Efficacy (lm/W)	Peak Intensity (cd)
RGBA	-	-	-
RGBW with Royal Blue	-	-	-

Dynamic colour lumen output values based on 5W/ft, 4 ft luminaire.

Tunable White	Lumen Output (lm)	Efficacy (lm/W)	Peak Intensity (cd)
2,700 K - 6,500 K	-	-	-

Tunable white lumen output values based on 5W/ft, 4ft luminaire with all channels at 100%.

powersync™ easyglow™ cooldrive™

Electrical

LED Power	4W/ft or 6W/ft
Consumption	≤7W/ft maximum
Lifetime (L70)	>60,000hrs (B10, L70, TM21)
Input Voltage	Low Voltage 48V DC
Thermal Management	CoolDrive™ onboard thermal monitoring and control.

Control

Interface	Lumascape PowerSync™
Protocols	DMX/RDM, Artnet, PWM[1], 0-10V (sink or source)[1] Some protocols require additional hardware. For details and for other available protocols contact factory. 1. Not available for Colour Changing
PWM Frequency	1,600Hz flicker free dimming to 0.1%
Control Resolution	100mm (3.9"), 300mm (11.8"), luminiare length configurable control resolution
Systems	Range of third-party controllers

Physical

Housing	Extruded marine grade aluminium, UV strengthened polycarbonate tube
Finish	Anodised Aluminium, or superior 9-step powder-coating process, including marine epoxy undercoat and polyester top coat.
Installation	Surface-mounted
Adjustable	A range of mounting options are available
Ambient Operating Temperature	-40°C to 50°C (-40°F to 122°F)
Surface Temperature	≤35°C (95°F)
Weight	4' section - 1.1kg (2.4lb)

Certification & Compliance

IP Rating	IP66 / IP67
IK Rating	IK6 (pending)
Environment	Dry, Damp, Wet locations
Certifications	ETL, CE, RCM, CCC (pending)

Luminaire Dimensions

Round Tube - Bottom Entry

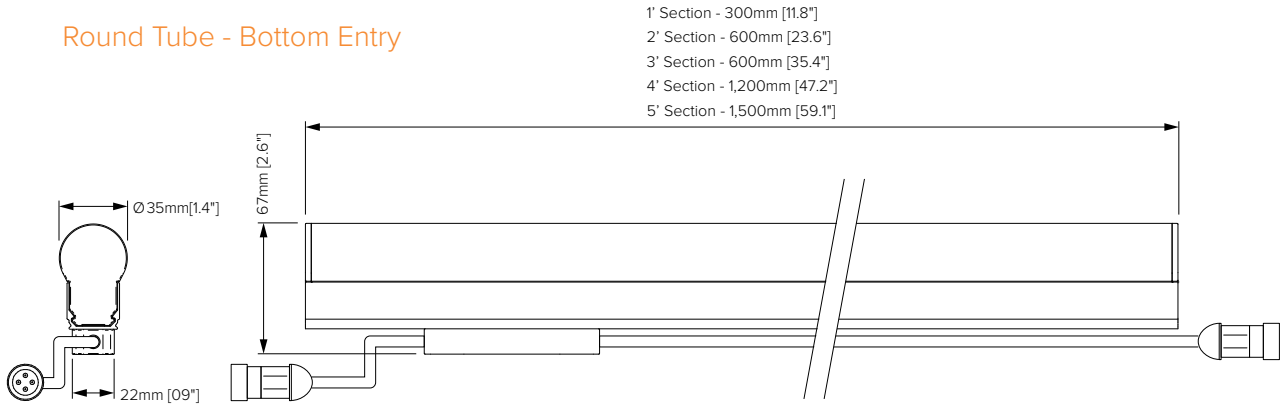

Custom brackets and mounting options are available on request.

Round Tube - Side Entry (Low Profile)

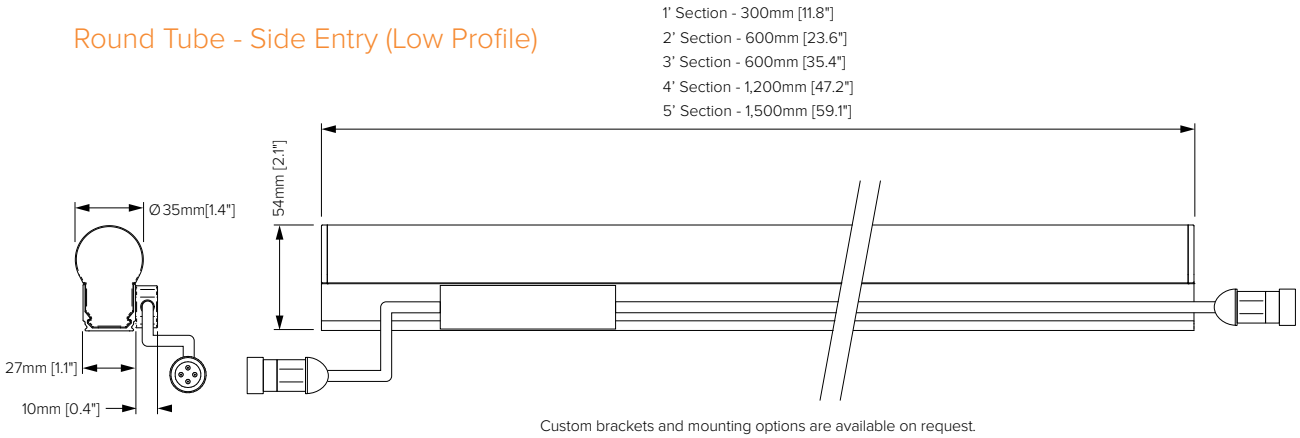

Custom brackets and mounting options are available on request.

Network Topology - PowerSync™ Low Voltage

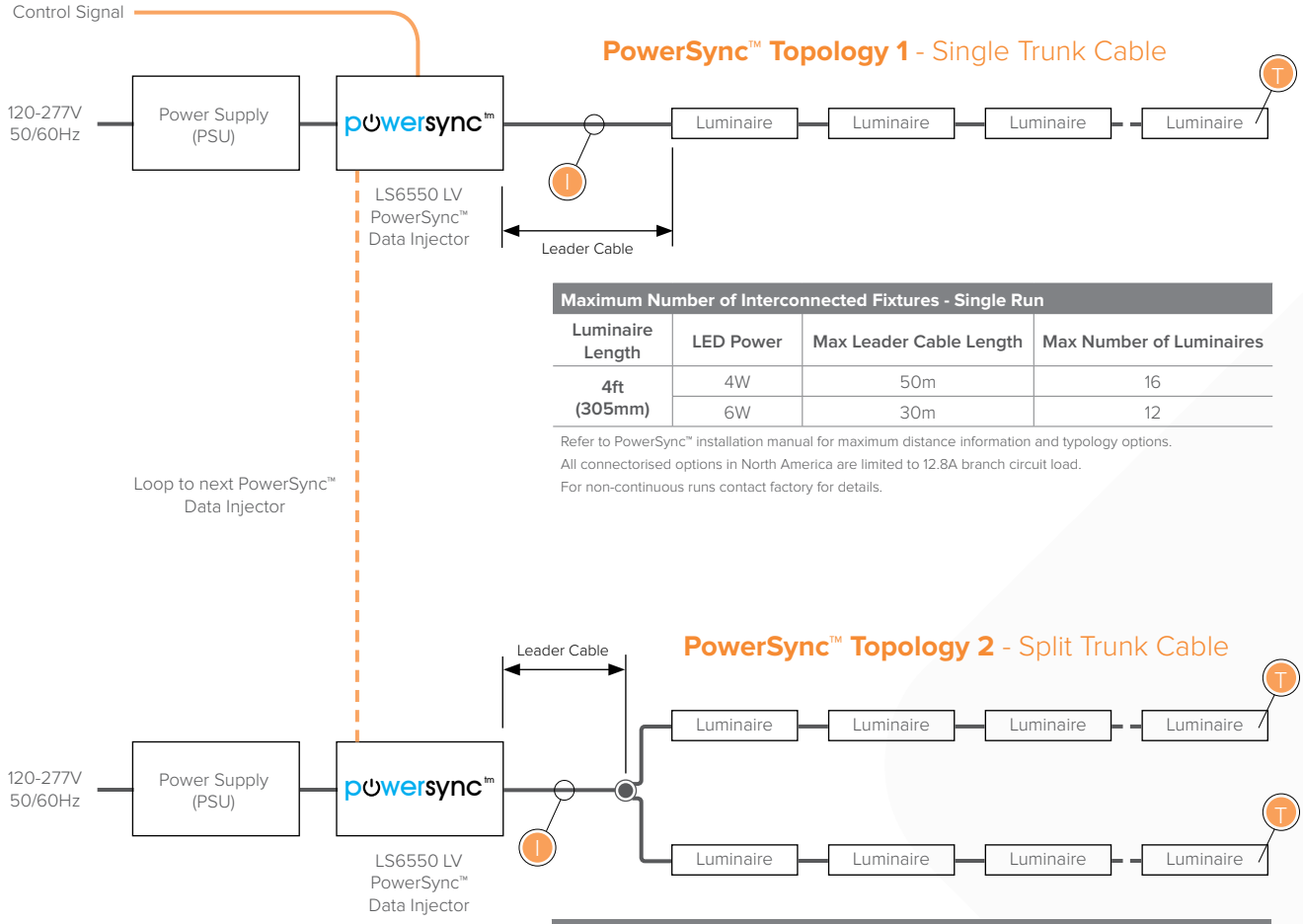

Maximum Number of Interconnected Fixtures - Single Run			
Luminaire Length	LED Power	Max Leader Cable Length	Max Number of Luminaires
4ft (305mm)	4W	50m	16
	6W	30m	12

Refer to PowerSync™ installation manual for maximum distance information and typology options.
All connectorised options in North America are limited to 12.8A branch circuit load.
For non-continuous runs contact factory for details.

Maximum Number of Interconnected Fixtures - Parallel Run			
Luminaire Length	LED Power	Max Leader Cable Length	Max Number of Luminaires
4ft (305mm)	4W	5m	15 x 2
	6W	5m	12 x 2

Refer to PowerSync™ installation manual for maximum distance information and typology options.
All connectorised options in North America are limited to 12.8A branch circuit load.
For non-continuous runs contact factory for details.

Up to 30 luminaires per run under the following conditions:

- Refer to 'Maximum Circuit Load' table for circuit limitations
- Always observe local electrical codes for branch circuit current limitations

Maximum Circuit Load

Maximum Number of Interconnected Fixtures	
PSU Power	Maximum Number of Luminaires
600W	30 (4ft, 4W/ft)
480W	24 (4ft, 4W/ft)
320W	15 (4ft, 4W/ft)

Refer to PowerSync™ installation manual for maximum distance information and typology options.
All connectorised options in North America are limited to 12.8A branch circuit load.
For non-continuous runs contact factory for details.

T Terminator
Use PowerSync™ terminator, supplied with leader cable to terminate last luminaire in chain.

I Maximum Current
Through Cables & Connectors ≤12.8A.

Connection Type
Circuits are configured as connectorised. For details consult installation instructions and comply with local electrical codes.

NOTE: The above diagrams are intended to show electrical pathways between luminaires and ancillary device. These diagrams are not intended to show type or colour of cord / wire, luminaire input voltage rating, wire gauge or approved use of the cord / wire supplied with luminaires.

LS9016				C								

Power	Code
4W/ft	04W
6W/ft	06W

Static White & Colour	Code
2,700 K (80 CRI)	827
3,000 K (80 CRI)	830
3,500 K (80 CRI)	835
4,000 K (80 CRI)	840
5,000 K (70 CRI)	750
Red	RED
Green	GRN
Blue	BLU

Dynamic Colour	Code
RGBA	4CA
RGBW with Royal Blue	4BW

Tunable White	Code
2,700 K - 6,500 K	2WT

Connection Type	Code
Flexible cable, single entry, for connectorised installations	67
Flexible cable, double entry, for connectorised installations	63

Optics	Code
Opal cylinder	C

Length	Code
1' - 300mm (11.8")	1
2' - 600mm (23.6")	2
3' - 900mm (35.4")	3
4' - 1,200mm (47.2")	4
5' - 1,500mm (59.0")	5

Housing	Code
Standard	A(1)
Low Profile	B(2)

(1) Bottom cable entry
(2) Side cable entry

Control Resolution	Code
100mm (3.9")	3
300mm (11.8")	4

Mounting	Code
Adjustable Bracket	A
Fixed Bracket	B

Input Voltage	Code
48V DC	07(1)
48V DC	13(2)

(1) International market
(2) North American market

Control	Code
Non-Dim	ND(1)
Powersync™	PS(2)

(1) For single colour, non-dimming applications only.
(2) Required for all dimming and colour changing applications. LS6550 Data Injector required - order separately

Finish	Code
Anodised Clear	AC

Other finishes available on request. Minimum order quantities apply.

Luminaire Gap	Code
End-To-End (ETE)	000(1)
0.3m (1') Gap	001
0.6m (2') Gap	002
0.9m (3') Gap	003
1.8m (6') Gap	006

(1) Default - Minimum length for ETE connection.

Commercial Production from **Q2 2018**

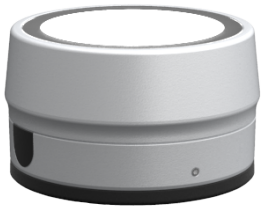

The Faisca F6 is an intelligent and high-powered architectural marker light. The simple yet elegant design allows for easy and rapid installation. Plug and play electrical connections further contribute to the quick and easy installation process and protect against incorrect connections.

Leader cables of up to 100m (33') give great flexibility when it comes to installation as power supplies and control equipment can be housed well away from the luminaires.

The F6 utilises high quality LEDs achieving high intensity whilst maintaining beautiful, rich and vibrant colours. To the viewer the F6 has perfectly even Illumination and colour consistency.

The Fascia can be integrated into a single PowerSync™ 4 LV network alongside other PowerSync™ 4 LV enabled products. This interconnectivity enables the easy deployment of captivating, mixed facades without complication.

From highlighting architectural elements to super smooth crossfades and colour flows, imagination is the only limit to what can be achieved with a combination of luminaires in a PowerSync™ 4 LV network.

Performance

Source	Optics	Lumen Output (lm)	Efficacy (lm/W)
RGBW with Royal Blue	Clear Flat Lens	1,200	66
RGBW with Royal Blue	Frosted Domed Lens	1,000	55

powersync™ easyglow™ cooldrive™

Performance

Optics	Flat or Domed Clear or Frosted

Electrical

LED Power	17W
Consumption	≤18W
Lifetime (L70)	>60,000 hrs (B10, L70, TM21)
Input Voltage	48V DC
Thermal Management	CoolDrive™ onboard thermal monitoring, control and reporting.

Control

Interface	Lumascape PowerSync™ 4 LV
Protocols	DMX/RDM, Artnet, PWM[1], sACN, 0-10V (sink or source)[1], Phase dimming[1] For other protocols contact factory 1. Not available for Colour Changing
PWM Frequency	2,000 Hz flicker free dimming to 0.1%
Systems	Compatible with all third party Artnet and sACN control systems including Pharos and Madrix

Physical

Housing	Die cast marine grade aluminum, UV stabilised polymer diffuser.
Finish	Superior 9-step powder-coating process, including marine epoxy undercoat and polyester top coat.
Installation	Surface-mounted
Ambient Operating Temperature	-40°C to 50°C (-40°F to 122°F)
Surface Temperature	≤50°C (122°F)
Weight	1.3kg (2.9lb)

Certification & Compliance

IP Rating	IP66 / IP67
IK Rating	IK10
Environment	Dry, Damp, Wet locations
Certifications	ETL, CE, RCM, CCC (pending)

Luminaire Dimensions - Flat Lens - Side Entry (Loop-In Loop-Out)

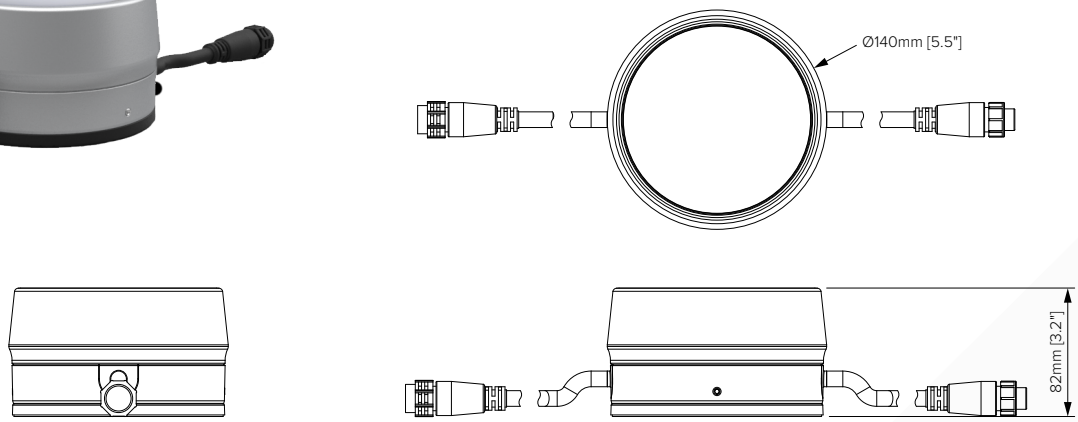

Please consult factory for North American design

Luminaire Dimensions - Domed Lens - Side Entry (Loop-In Loop-Out)

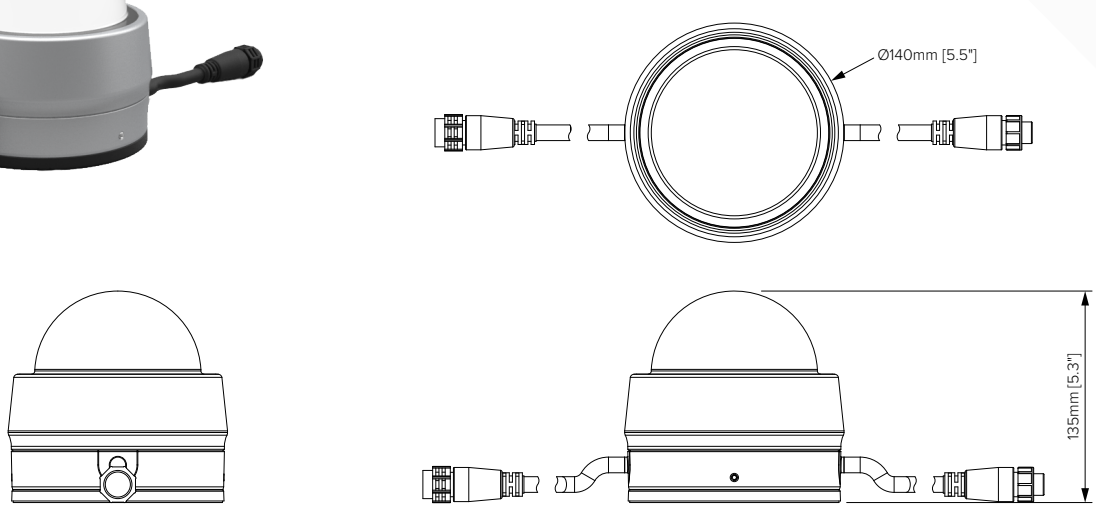

Please consult factory for North American design

Luminaire Dimensions - Flat Lens - Bottom Entry

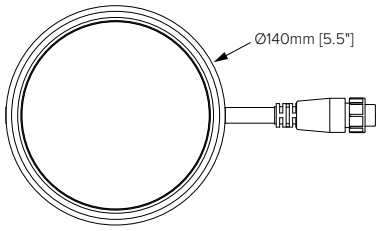

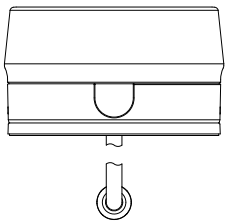

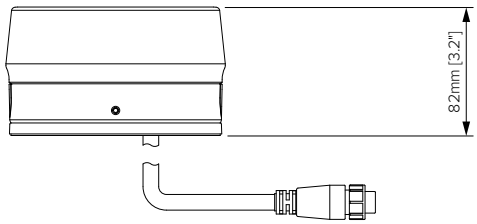

Please consult factory for North American design

Luminaire Dimensions - Domed Lens - Bottom Entry

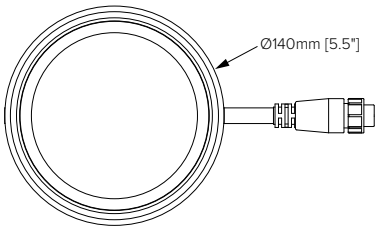

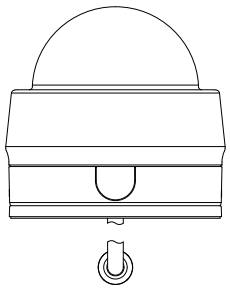

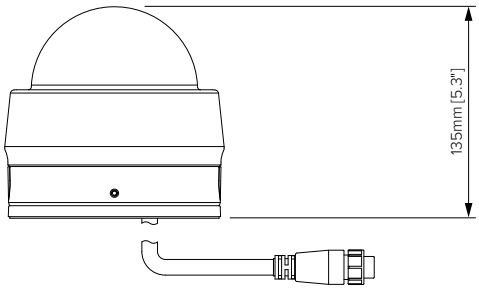

Please consult factory for North American design

Network Topology - PowerSync™ Low Voltage

Vestalux and Archimark may share the same circuit

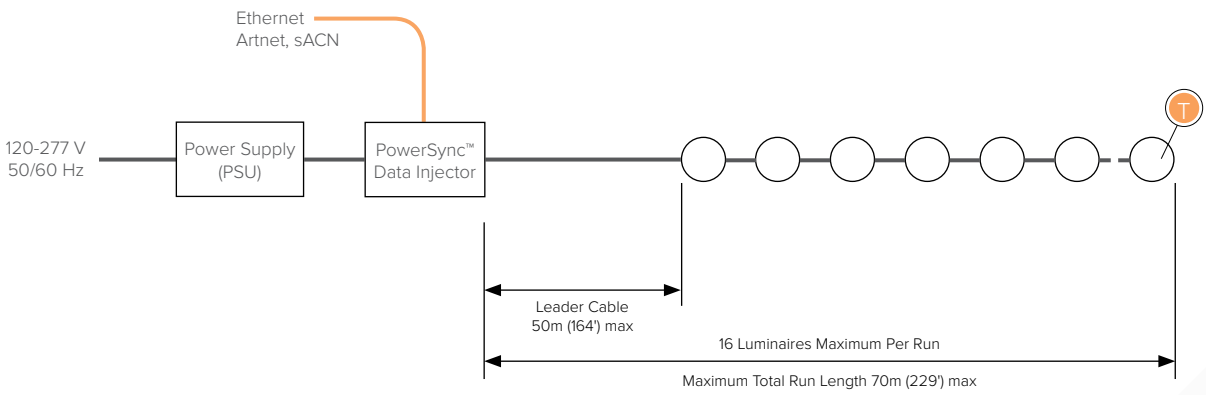

Up to 15 luminaires per run under the following conditions:

- Max total cable run length 70m (229') in one trunk cable
- Refer to 'Maximum Circuit Load' table for circuit limitations
- Always observe local electrical codes for branch circuit current limitations

Terminator

Use PowerSync™ terminator, supplied with leader cable to terminate last luminaire in chain.

Maximum Current

Through Cables & Connectors ≤12.8A.

Connection Type

Circuits are configured as connectorised. For details consult installation instructions and comply with local electrical codes.

NOTE: The above diagrams are intended to show electrical pathways between luminaires and ancillary device. These diagrams are not intended to show type or colour of cord / wire, luminaire input voltage rating, wire gauge or approved use of the cord / wire supplied with luminaires.

LS9260	17W							

Power	Code
17W	17W

Static White & Colour	Code
2,700 K (80 CRI)	827
3,000 K (80 CRI)	830
3,500 K (80 CRI)	835
4,000 K (80 CRI)	840
5,000 K (70 CRI)	750
Red	RED
Green	GRN
Blue	BLU

Dynamic Colour	Code
RGBA	4CA
RGBW with Royal Blue	4BW

Tunable White	Code
2,700 K - 6,500 K	2WT

Connection Type	Code
Flexible cable, single entry, for connectorised installations	67
Flexible cable, double entry, for connectorised installations	63

Optics	Code
Flat Lens, Clear	D
Flat Lens, Frosted	E
Domed Lens, Frosted	G

Cable Entry	Code
Side	N
Bottom	Q

Input Voltage	Code
48V DC	07(1)
48V DC	13(2)

(1) International market
(2) North American market

Control	Code
Non-Dim	ND(1)
Powersync™	PS(2)

(1) For single colour, non-dimming applications only.
(2) Required for all dimming and colour changing applications. LS6550 Data Injector required - order separately

Finish	Code
Black	BL
Anthracite Grey	AG
Basalt Grey	BT
Anodic Silver	SL
White	WT
Dark Bronze	DB
Latte	LT
Dark Aluminum	DA
Custom RAL	CC(1)

(1) Please provide RAL colour.

Commercial Production from **Q1 2018**

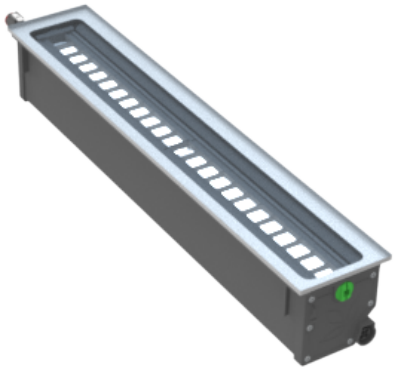

The LS3150 high output linear inground brings together the best Lumascape technology in a simple yet stylish linear form factor with a bezel-less edge to edge glass finish. With ±15° tilt adjustment, the LS3150 is a versatile, high performance lighting instrument. It's available with white, colour changing and tuneable white light engines and features industry leading EasyGlow™ visual comfort technology. PowerSync™ digital control technology (onboard all next generation luminaires) suits both highly granular DMX/RDM control requirements and standard white light dimming via common protocols. All Linear Ingrounds are built to the high quality standards Lumascape is renowned for. Fixtures can be installed end to end for continuous linear lighting. Industry leading CoolDrive™ thermal management technology features in all next generation Lumascape luminaires.

Performance

Static White & Colour	Lumen Output (lm)	Efficacy (lm/W)	Peak Intensity (cd)
2,700 K (80 CRI)	-	-	-
3,000 K (80 CRI)	6,300	-	-
3,500 K (80 CRI)	-	-	-
4,000 K (80 CRI)	-	-	-
5,000 K (70 CRI)	-	-	-
Red	-	-	-
Green	-	-	-
Blue	-	-	-

Static white lumen output values are based on 16W/ft, 4ft luminaire with 6° lens.

Dynamic Colour	Lumen Output (lm)	Efficacy (lm/W)	Peak Intensity (cd)
RGBA	-	-	-
RGBW	-	-	-
RGB(1)	-	-	-

(1) RGB available on request.

Tunable White	Lumen Output (lm)	Efficacy (lm/W)	Peak Intensity (cd)
2,700 K - 6,500 K	-	-	-

humantouch™ powersync™ easyglow™ cooldrive™

Performance

Beam Angles	6°, 15°, 30°, 45°, 60°, 60° x 10°, 40° x 10°, 40° x 20°, 60° x 20°

Electrical

LED Power	16W/ft
Consumption	20W/ft maximum
Lifetime (L70)	>60,000 hrs (B10, L70, TM21)
Input Voltage	120-277V, 50/60Hz
Thermal Management	CoolDrive™ onboard thermal monitoring and control.

Control

Interface	Lumascape PowerSync™
Protocols	DMX/RDM, Artnet, PWM[1], 0-10V (sink or source)[1] Some protocols require additional hardware. For details and for other available protocols contact factory. 1. Not available for Colour Changing
PWM Frequency	2,000Hz flicker free dimming to 0.1%
Systems	Range of third-party controllers

Physical

Housing	Extruded aluminum, tempered glass.
Finish	Superior 9-step powder-coating process, including marine epoxy undercoat and polyester top coat.
Installation	Pre-installation
Adjustable	±15° Tilt
Ambient Operating Temperature	-40°C to 50°C (-40°F to 122°F)
Surface Temperature	≤50°C (122°F) | 16W/ft
Weight	4' section - 6.7kg (14.8lb)

Certification & Compliance

IP Rating	IP66 / IP67 (IP68 Tested)
IK Rating	TBA
Environment	Dry, Damp, Wet locations (Not suitable for underwater applications)
Certifications	ETL, CE, RCM, CCC (Pending)

Luminaire Dimensions (No Stainless Steel Trim)

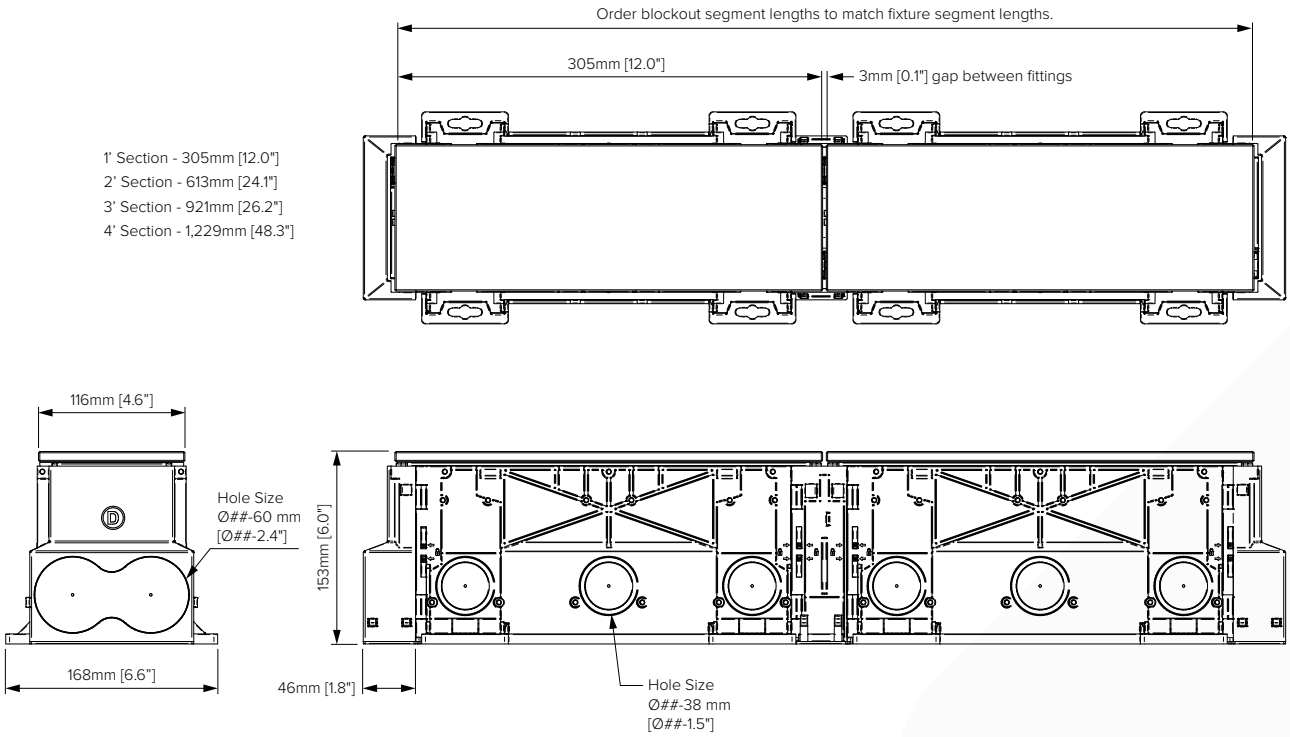

Installation

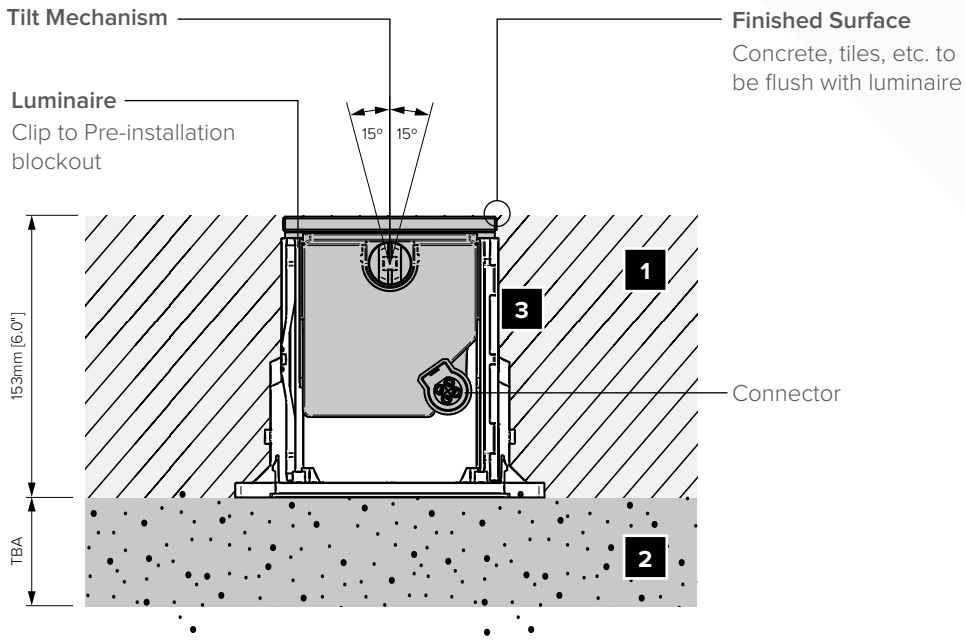

Installed Niche

1 Poured Concrete

2 Draining Aggregate

3 Niche Assembly

Luminaire Dimensions (With Stainless Steel Trim)

1' Section - 305mm [12.0"]
2' Section - 613mm [24.1"]
3' Section - 921mm [26.2"]
4' Section - 1,229mm [48.3"]

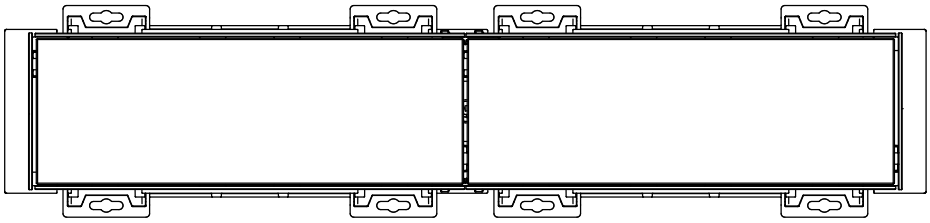

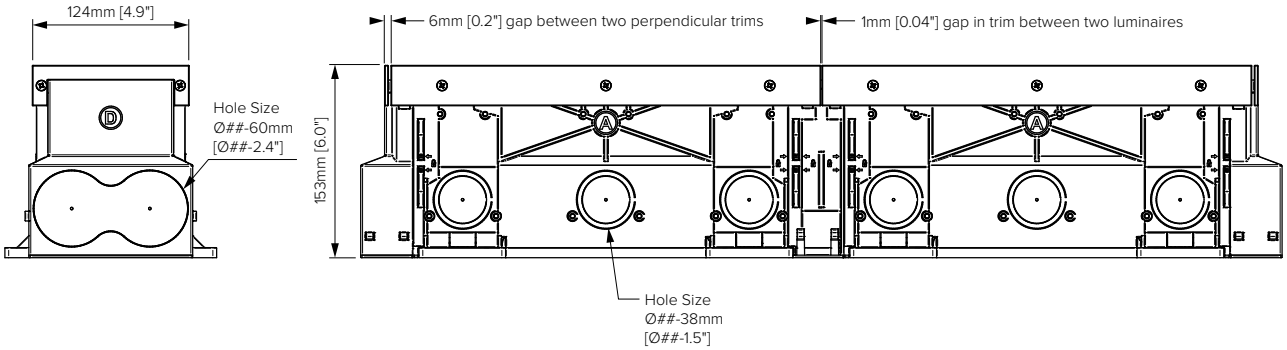

Installation

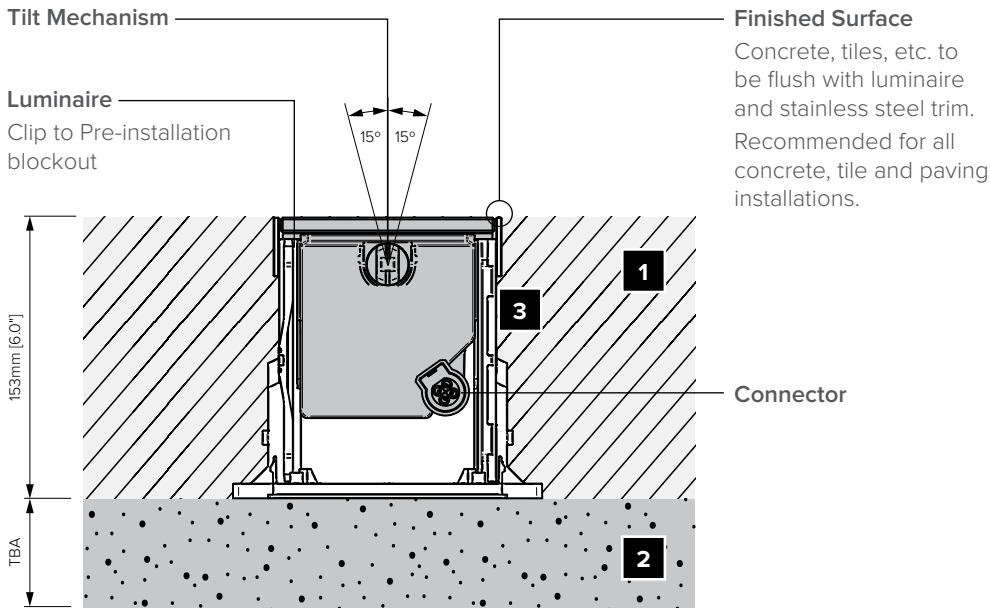

Installed Niche

1 Poured Concrete

2 Draining Aggregate

3 Niche Assembly

LS3150	16W								

Power	Code
16W/ft	16W

Static White & Colour	Code
2,700 K (80 CRI)	827
3,000 K (80 CRI)	830
3,500 K (80 CRI)	835
4,000 K (80 CRI)	840
5,000 K (70 CRI)	750
Red	RED
Green	GRN
Blue	BLU

Dynamic Colour	Code
RGBA	4CA
RGBW	4CW
RGB	RGB(1)

(1) Available on request

Tunable White	Code
2,700 K - 6,500 K	2WT

Lens	Code
OptiClear™	A
GripGlass™	G

Connection Type	Code
Flexible cable, single entry, for hard wired installations	84
Flexible cable, double entry, for hard wired installations	83
Flexible cable, single entry, for connectorised installations	77
Flexible cable, double entry, for connectorised installations	73

Beam	Code
6°	VN
15°	NM
30°	ME
45°	WD
60°	WF
60° x 10°	LH
40° x 10°	NH
40° x 20°	MH
60° x 20°	WH

Length	Code
1' - 305mm (12.0")	1
2' - 610mm (24.0")	2
3' - 915mm (36.0")	3
4' - 1,220mm (48.0")	4

Internal Shielding	Code
Full pitch	F
Half pitch	H
None	N

Input Voltage	Code
110-240V, 50/60Hz	01(1)
120-277V, 50/60Hz	09(2)

(1) International market

(2) North American market

Control	Code
Non-Dim	ND(1)
Powersync™	PS(2)

(1) For single colour, non-dimming applications only.

(2) Required for all dimming and colour changing applications. LS6540 Data Injector required - order separately

Beam Orientations

Beam Orientation for the "LH" and "MH" optical system

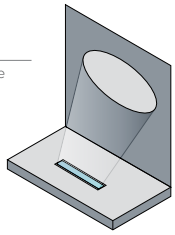

Pre Installation Blockout Kits

Blockout Start / Standalone Section	Code
Blockout starter section suit LS3150 1'	LS6312-1
Blockout starter section suit LS3150 2'	LS6312-2
Blockout starter section suit LS3150 3'	LS6312-3
Blockout starter section suit LS3150 4'	LS6312-4
Blockout starter section suit LS3150 1' SS trim	LS6312-1-SS
Blockout starter section suit LS3150 2' SS trim	LS6312-2-SS
Blockout starter section suit LS3150 3' SS trim	LS6312-3-SS
Blockout starter section suit LS3150 4' SS trim	LS6312-4-SS

Blockout Middle / End Section	Code
Blockout middle section suit LS3150 1'	LS6313-1
Blockout middle section suit LS3150 2'	LS6313-2
Blockout middle section suit LS3150 3'	LS6313-3
Blockout middle section suit LS3150 4'	LS6313-4
Blockout middle section suit LS3150 1' SS trim	LS6313-1-SS
Blockout middle section suit LS3150 2' SS trim	LS6313-2-SS
Blockout middle section suit LS3150 3' SS trim	LS6313-3-SS
Blockout middle section suit LS3150 4' SS trim	LS6313-4-SS

T / L Joiners	Code
Blockout T/L joiner to suit LS3150	LS6314
Blockout T/L joiner to suit LS3150 SS trim	LS6314-SS

Component Overview

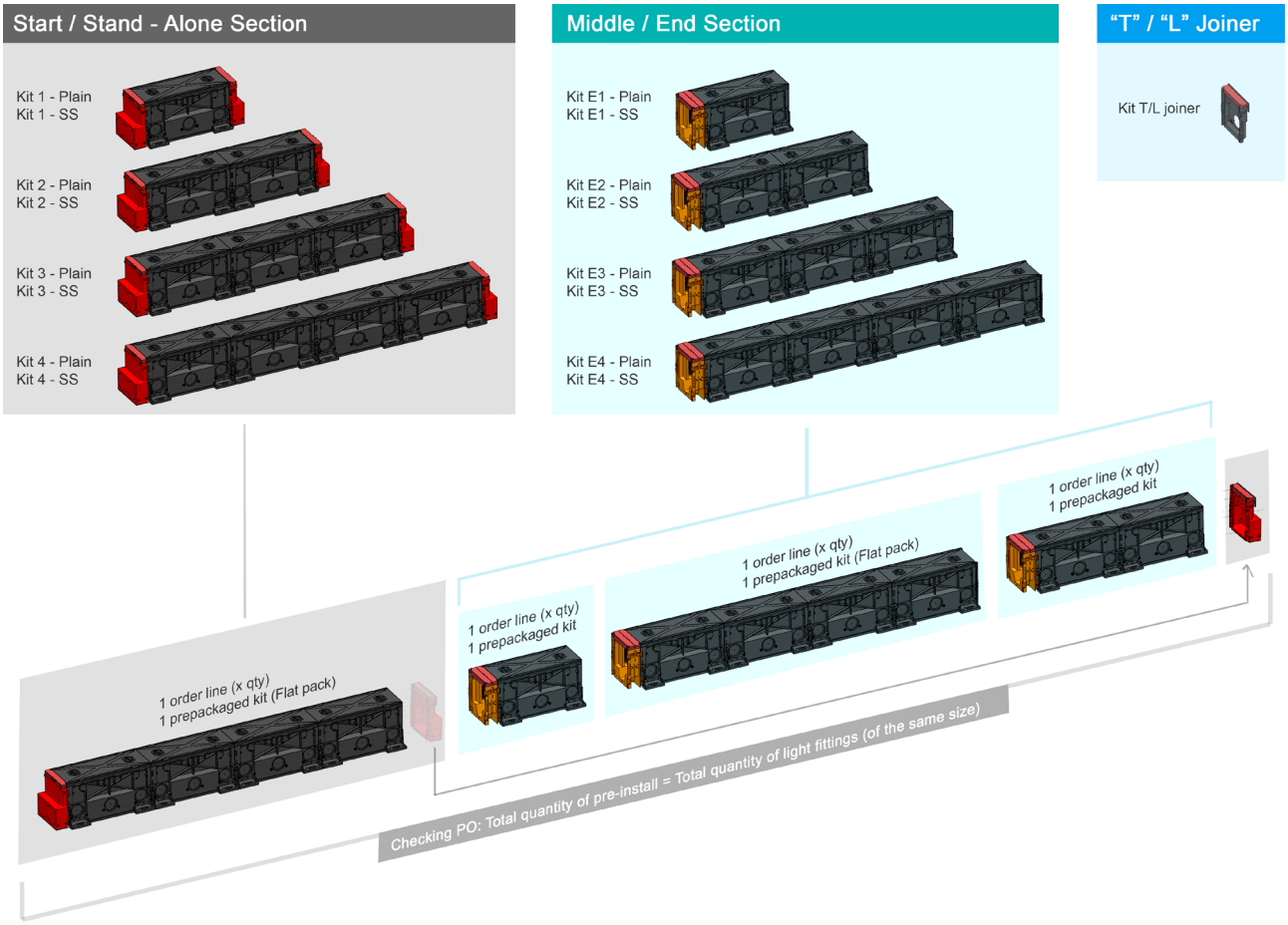

Network Topology - PowerSync™ Dimmable

PowerSync™ Topology 1 - Single Trunk Cable

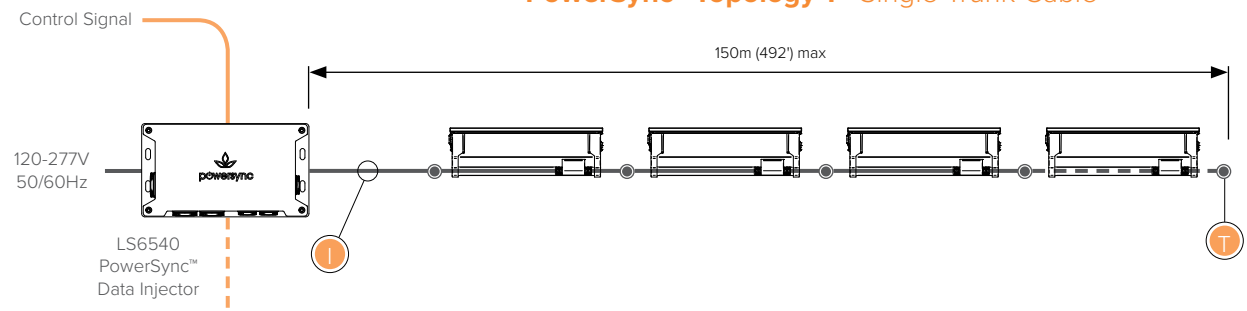

PowerSync™ Topology 2 - Split Trunk Cable

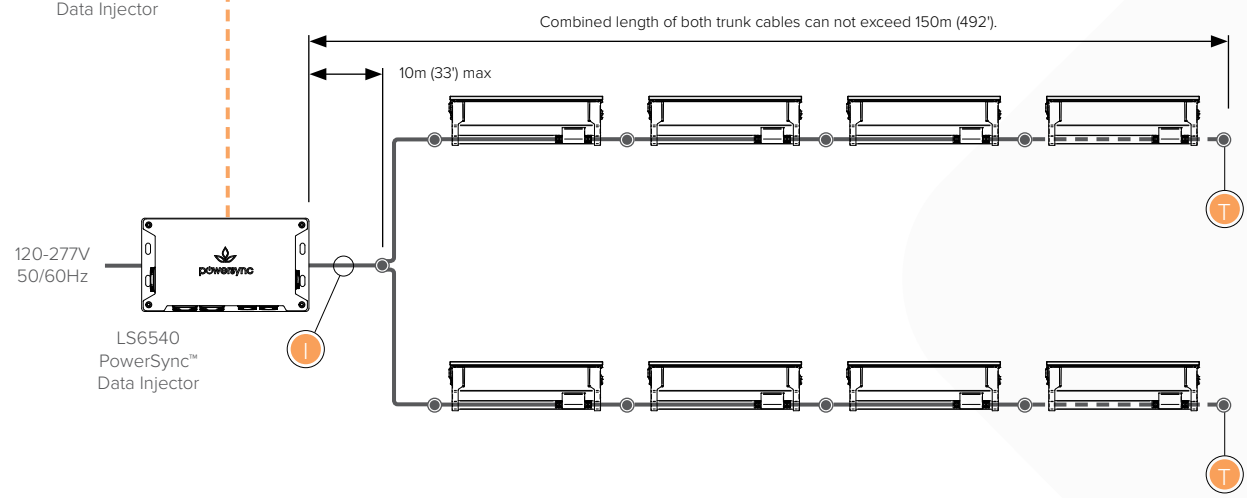

Up to 45 luminaires per run under the following conditions:

- Max total cable run length 150m (492') in up to two trunk cables
- Refer to 'Maximum Circuit Load' table for circuit limitations
- Always observe local electrical codes for branch circuit current limitations
- For run length in excess of 30m (100') use a wire size not lower than 14 AWG

Terminator

Use PowerSync™ terminator, supplied with leader cable to terminate last luminaire in chain.

Maximum Current

≤16.0A through cables and connectors supplied by Lumascape
≤12.8A applies to connectorised installations in North America

Connection Type

Circuits can be configured as either connectorised or hardwired. For details consult installation instructions and comply with local electrical codes.

Maximum Circuit Load

Maximum Number of Interconnected Fixtures							
Luminaire Length	LED Power	120V		240V		277V	
		12.8A	16A	12.8A	16A	12.8A	16A
1ft (305mm)	15W	45	45	45	45	45	45
2ft (610mm)	15W	40	45	45	45	45	45
3ft (915mm)	15W	26	35	45	45	45	45
4ft (1,220mm)	15W	20	26	40	45	45	45

Refer to PowerSync™ installation manual for maximum distance information and typology options.
All connectorised options in North America are limited to 12.8A branch circuit load.
For non-continuous runs contact factory for details.

NOTE: The above diagrams are intended to show electrical pathways between luminaires and ancillary device. These diagrams are not intended to show type or colour of cord / wire, luminaire input voltage rating, wire gauge or approved use of the cord / wire supplied with luminaires.

Network Topology - Non-Dimmable

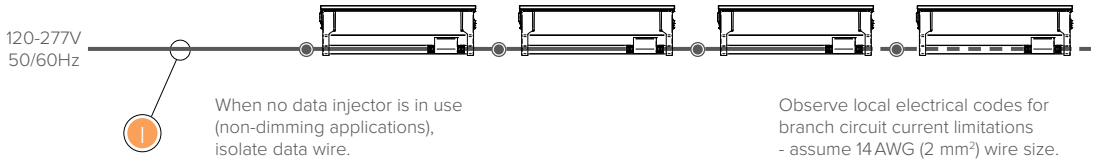

Up to 45 luminaires per run under the following conditions:

- Refer to 'Maximum Circuit Load' table for circuit limitations
- Always observe local electrical codes for branch circuit current limitations

Maximum Current

≤16.0A through cables and connectors supplied by Lumascape
≤12.8A applies to connectorised installations in North America

Connection Type

Circuits can be configured as either connectorised or hardwired. For details consult installation instructions and comply with local electrical codes.

Maximum Circuit Load

Maximum Number of Interconnected Fixtures							
Luminaire Length	LED Power	120V		240V		277V	
		12.8A	16A	12.8A	16A	12.8A	16A
1ft (305mm)	15W	45	45	45	45	45	45
2ft (610mm)	15W	40	45	45	45	45	45
3ft (915mm)	15W	26	35	45	45	45	45
4ft (1,220mm)	15W	20	26	40	45	45	45

Refer to PowerSync™ installation manual for maximum distance information and typology options.
All connectorised options in North America are limited to 12.8A branch circuit load.
For non-continuous runs contact factory for details.

NOTE: The above diagrams are intended to show electrical pathways between luminaires and ancillary device. These diagrams are not intended to show type or colour of cord / wire, luminaire input voltage rating, wire gauge or approved use of the cord / wire supplied with luminaires.

The Erden E4 is a medium-powered inground uplighter that combines technology and performance in a modern form factor. Available in white, colour changing and tunable white light engines, the Erden E4 is packed with features including EasyGlow™ visual comfort and CoolDrive™ thermal management technologies. PowerSync™ allows for highly granular digital control via common protocols using mains voltage. CoolDrive™ active thermal management engages as internal temperatures increase to keep light output consistent. Only under extreme conditions will the luminaire take control and dim the output gradually and smoothly.

Performance

Static White & Colour	Lumen Output (lm)	Efficacy (lm/W)	Peak Intensity (cd)
2,700 K (80 CRI)	-	-	-
3,000 K (80 CRI)	-	-	-
3,500 K (80 CRI)	-	-	-
4,000 K (80 CRI)	-	-	-
5,000 K (70 CRI)	-	-	-
Red	-	-	-
Green	-	-	-
Blue	-	-	-

Dynamic Colour	Lumen Output (lm)	Efficacy (lm/W)	Peak Intensity (cd)
RGBA	-	-	-
RGBW	-	-	-
RGB(1)	-	-	-

(1) RGB available on request.

Tunable White	Lumen Output (lm)	Efficacy (lm/W)	Peak Intensity (cd)
2,700 K - 6,500 K	-	-	-

Performance

Beam Angles	10°, 13°, 20°, 26°, 47°, 40° x 10°, 60° x 20°

powersync™ easyglow™ cooldrive™

humantouch™ gripglass™ opticlear™ microantileach™

Electrical

LED Power	16W
Consumption	≤20W maximum
Lifetime (L70)	>60,000hrs (B10, L70, TM21)
Input Voltage	120-277V, 50/60Hz
Thermal Management	CoolDrive™ onboard thermal monitoring and control.

Control

Interface	Lumascape PowerSync™
Protocols	DMX/RDM, Artnet, PWM[1], 0-10V (sink or source)[1] Some protocols require additional hardware. For details and for other available protocols contact factory. 1. Not available for Colour Changing
PWM Frequency	2,000Hz flicker free dimming to 0.1%
Systems	Range of third-party controllers

Physical

Housing	316 Marine Grade Stainless Steel housing, high strength glass with 1,800kg (3,968lb) static load rating (when used in conjunction with LS644-K), teflon coated cover screws. 316 Marine Grade Stainless Steel cover (polished or brushed finish).
Finish	Superior 9-step powder-coating process, including marine epoxy undercoat and polyester top coat.
Installation	Pre-Installation Blockout for concrete pour, drive-over and general use applications Mounting Collar for decks and grates Direct Burial for landscapes, planters and special applications (consult factory)
Mounting Accessories	LS644-K Pre-Installation Concete Blockout LS644-2 Mounting Collar for decks and grates
Adjustable	-5° to +20° tilt, 360° rotation
Ambient Operating Temperature	-20°C to 50°C (-4°F to 122°F)
Surface Temperature	≤65°C (149°F)
Weight	4.0kg (8.8lb)

Certification & Compliance

IP Rating	IP68
IK Rating	IK9
Environment	Dry, Damp, Wet locations Inherently Protected Suitable for use in poured concrete
Certifications	ETL, CE, RCM, CCC (Pending)

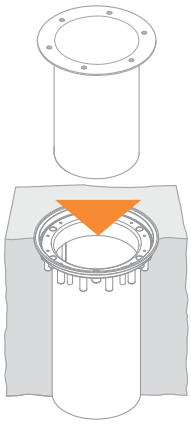

Pre-Installation Blockout

This type of installation requires the LS644-K Pre-Installation Kit (order separately) which acts as a concrete blockout and is intended for installation before the luminaire. This method ensures the luminaire itself is not damaged during concreting or other site works.

Use for	☐ Drive over applications ☐ General use applications ☐ Concrete pour applications where luminaire is to be installed after site work has been completed
Benefits	☐ Easy removal for servicing
Restrictions	☐ Connection Type 82 only available for North American market
Accessories	☐ LS644-K Pre-Installation Blockout

Connection type '84'

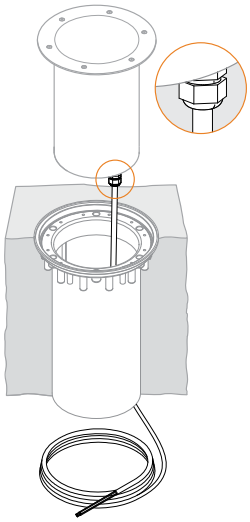

Flexible Cable

For connections to the branch circuit via junction box (by others) or other approved method. 2m (6.5') length. For other length options, consult factory.

Connection type '77'

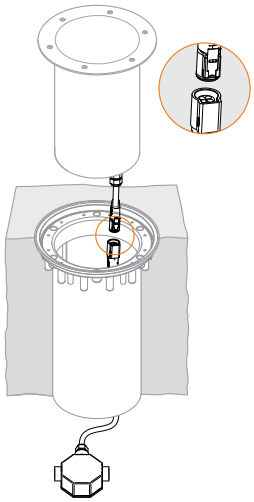

IP68 Connector & Junction Box

The luminaire is fitted with an IP68 connector, which attaches directly to the cable supplied with LS644-K without the use of any tools. The cable is 1m (3') in length and is factory assembled with a j-box.

Connection type '82'

North American market only

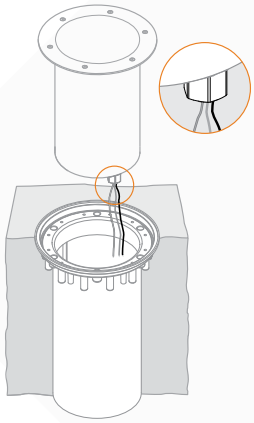

½" NPT Adapter

The luminaire is factory-fitted with 2.0m (6.5') hookup wire. Ensure terminations can be made within this length. For other length options, consult factory.

Specification

Use the table below to specify your Pre-Installation Blockout.

LS644-K	

Connection Type	Code
Flexible cable, single entry, for hard wired installations or hook-up wire and 1/2" NPT, single entry, for hard wired installations	84
Flexible cable, single entry, for connectorised installations	77

For other cable entry options contact factory.

Flush Cover Options

Flush covers for pre-installation use special seals and support bushes to ensure static loads up to 1,800kg (3,968lb) are properly supported. In order to achieve this drive-over rating, OptiClear™ or GripGlass™ must be used.

Pre-Installation Blockout Round Flush Cover

- SS316: Polished
- SS316: Brushed

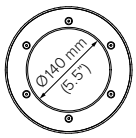

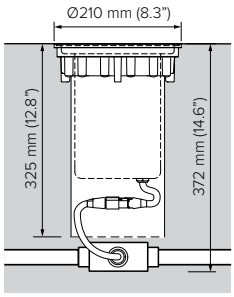

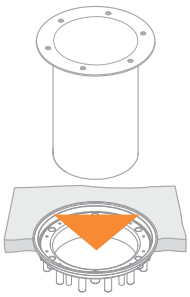

Mounting Collar for Deck and Grates

This type of installation requires the LS644-2 Mounting Collar (order separately) which supports the installation in decks, grates and hollow floors with sufficient ventilation.

Use for	☐ Decks and grates ☐ Hollow floors with sufficient ventilation
Benefits	☐ Easy installation in decks, grates and hollow floors
Restrictions	☐ Only available with Connection Type 84
Accessories	☐ LS644-2 Mounting Collar

Connection type '84'

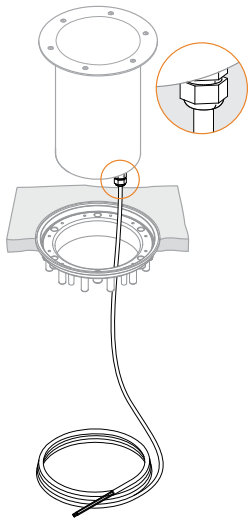

Flexible Cable

For connections to the branch circuit via junction box (by others) or other approved method. 3 m (9.8') length. For other length options, consult factory.

Flush Cover Options

Flush covers for mounting collar use special seals and support bushes.

Mounting Collar Round Flush Cover

- SS316: Polished
- SS316: Brushed

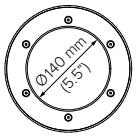

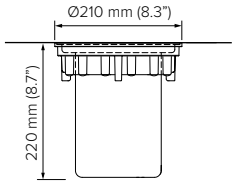

Specification

Use the table below to specify the Mounting Collar for Decks & Grates.

LS644-2	84

Connection Type	Code
Flexible cable, single entry, for hard wired installations	84

For other cable entry options contact factory.

Pre Installation Specification

LS3040	16W						23	Q		PS

Static White & Colour	Code
2,700 K (80 CRI)	827
3,000 K (80 CRI)	830
3,500 K (80 CRI)	835
4,000 K (80 CRI)	840
5,000 K (70 CRI)	750
Red	RED
Green	GRN
Blue	BLU

Dynamic Colour	Code
RGBA	4CA
RGBW	4CW
RGB	RGB(1)

(1) Available on request

Tunable White	Code
2,700 K - 6,500 K	2WT

Lens	Code
OptiClear™	A
GripGlass™	G

Cover	Code
Stainless steel, polished	M
Stainless steel, brushed	N

Connection Type	Code
Flexible cable, single entry, for hard wired installations	84
Flexible cable, single entry, for connectorised installations	77
Hookup wire and 1/2" NPT, single entry, for hard wired installations	82(2)

(1) North American market only

For other cable entry options contact factory.

Beam	Code
10°	VN
13°	NR
20°	NM
26°	ME
47°	WD
40° x 10°	NH
10° x 40°	NV
60° x 20°	WH
20° x 60°	WV

Housing Depth	Code
Pre-Install Blockout 325mm (12.8")	23
Mounting Collar 220mm (8.7")	23

Cable Entry	Code
Bottom	Q

Input Voltage	Code
110-240V, 50/60Hz	01(1)
120-277V, 50/60Hz	09(2)

(1) International market

(2) North American market

Control	Code
PowerSync™	PS

Beam Orientations

Beam Orientation for the "NH" and "WH" optical system

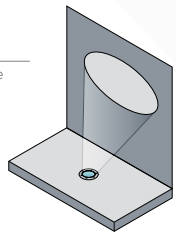

Beam Orientations

Beam Orientation for the "NV" and "WV" optical system

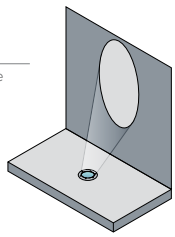

Erden E4

Caesars Golf Course
Macau

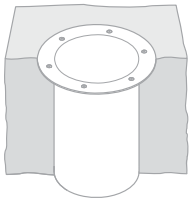

Direct Burial

Luminaire is put directly into soil or concrete.

Use for	☐ Landscaping areas ☐ Applications where depth is restricted ☐ Rated for use in concrete pour applications ☐ Economical option
Benefits	☐ Allows for maximum heat dissipation
Restrictions	☐ Not as easy to remove for service as pre-install version ☐ Not suitable for drive-over (Requires Pre-Installation) ☐ Not available with Connection Type 87 (Requires Pre-Installation) ☐ Connection Type 82 only available for North American market

Connection type '84'

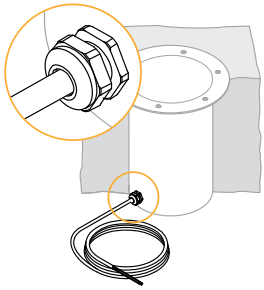

Flexible Cable

For connections to the branch circuit via junction box (by others) or other approved method. 3 m (9.8') length. For other length options, consult factory.

Connection type '81'

International market only

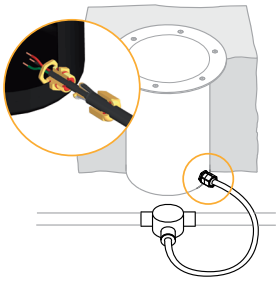

Armored Cable & Junction Box

The luminaire is factory-fitted with a 0.6 m (2') armored cable. Ensure terminations can be made within this length. For other length options, consult factory.

Connection type '82'

North American market only

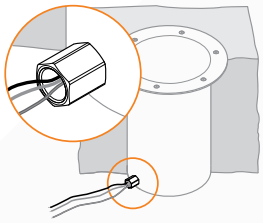

½" NPT Adapter

The luminaire is factory-fitted with 2.0m (6.5') hookup wire. Ensure terminations can be made within this length. For other length options, consult factory.

Recessed Cover Options

Use recessed cover for installation in soil, grass, pavers and other uneven surfaces where no cover overhang is desired.

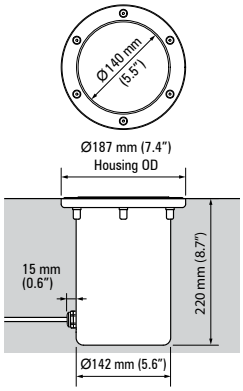

Recessed Cover

- SS316: Polished
- SS316: Brushed

Flush Cover Options

Use flush covers for installation in fine finished surfaces such as granite and marble. They can also be used in some suspended applications. The flush cover will conceal gaps between the luminaire and the surrounding surface.

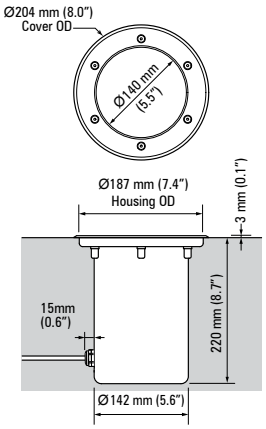

Round Flush Cover

- SS316: Polished
- SS316: Brushed

Direct Burial Specification

LS3040	16W									

Static White & Colour	Code
2,700 K (80 CRI)	827
3,000 K (80 CRI)	830
3,500 K (80 CRI)	835
4,000 K (80 CRI)	840
5,000 K (70 CRI)	750
Red	RED
Green	GRN
Blue	BLU

Dynamic Colour	Code
RGBA	4CA
RGBW	4CW
RGB	RGB[1]

(1) Available on request

Tunable White	Code
2,700 K - 6,500 K	2WT

Lens	Code
OptiClear™	A
GripGlass™	G

Cover	Code
Recessed type, stainless steel, polished	B
Recessed type, stainless steel, brushed	H
Round flush type, stainless steel, polished	D
Round flush type, stainless steel, brushed	I

Connection Type	Code
Flexible cable, single entry, for hard wired installations	84
Armoured cable and junction box	81[1]
IP68 connectror and junction box, for connectorised installations	77[1]
Hookup wire and 1/2" NPT, single entry, for hard wired installations	82[2]

(1) International market only
(2) North American market only
For other cable entry options contact factory.

Beam	Code
10°	VN
13°	NR
20°	NM
26°	ME
47°	WD
40° x 10°	NH
10° x 40°	NV
60° x 20°	WH
20° x 60°	WV

Housing Depth	Code
Direct Burial 220mm (8.7")	21

Cable Entry	Code
Side	N
Bottom	Q

Input Voltage	Code
110-240V, 50/60Hz	01[1]
120-277V, 50/60Hz	09[2]

(1) International market
(2) North American market

Control	Code
PowerSync™	PS

Beam Orientations

Beam Orientation for the "NH" and "WH" optical system

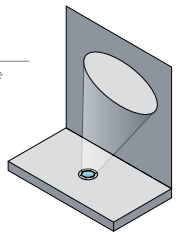

Beam Orientations

Beam Orientation for the "NV" and "WV" optical system

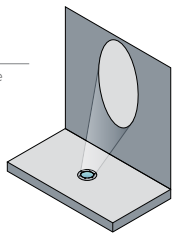

Network Topology - PowerSync™ Dimmable

PowerSync™ Topology 1 - Single Trunk Cable

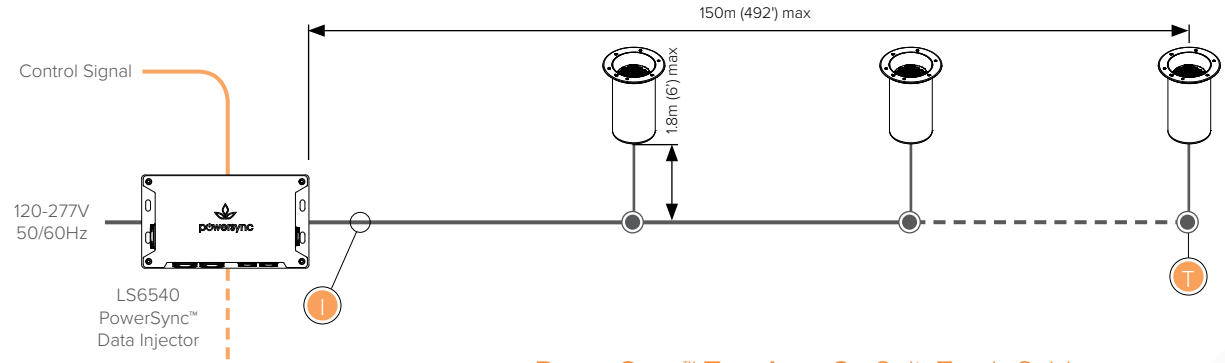

PowerSync™ Topology 2 - Split Trunk Cable

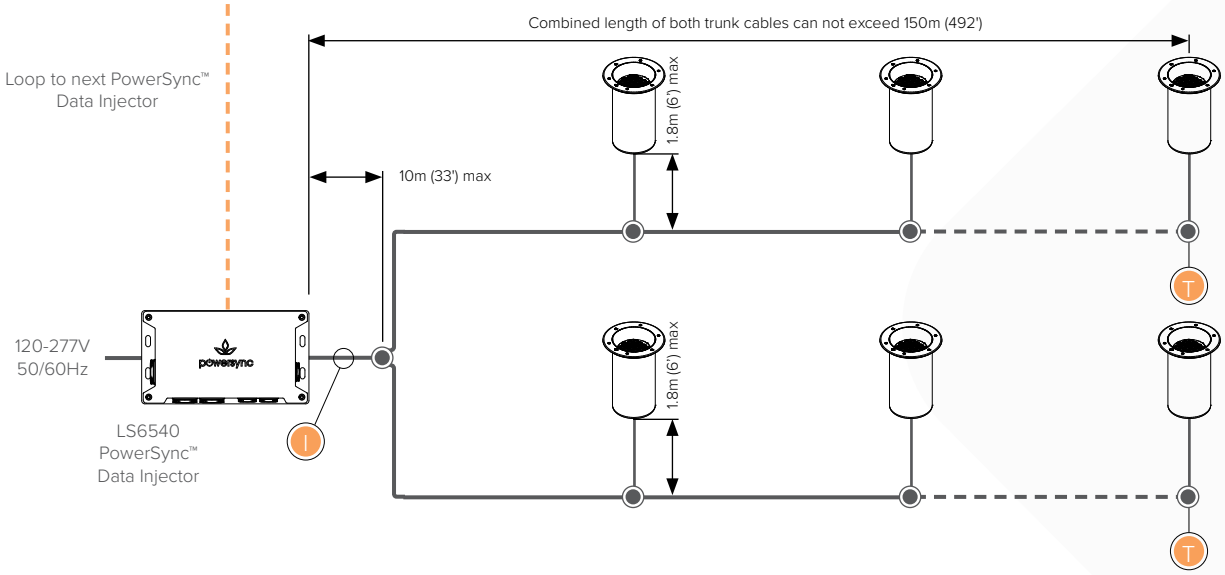

Up to 45 luminaires per run under the following conditions:

- Max total cable run lengtht 150m (492') in up to two trunk cables
- Refer to 'Maximum Circuit Load' table for circuit limitations
- Always observe local electrical codes for branch circuit current limitations
- For run length in excess of 30m (100') use a wire size not lower than 14 AWG

Terminator

Use PowerSync™ terminator, supplied with leader cable to terminate last luminaire in chain.

Maximum Current

≤16.0A through cables and connectors supplied by Lumascape
≤12.8A applies to connectorised installations in North America

Connection Type

Circuits can be configured as either connectorised or hardwired. For details consult installation instructions and comply with local electrical codes.

Maximum Circuit Load

Maximum Number of Interconnected Fixtures		
Voltage	12.8A	16A
120V	45	45
240V	45	45
277V	45	45

Refer to PowerSync™ installation manual for maximum distance information and typology options.

All connectorised options in North America are limited to 12.8A branch circuit load.

For non-continuous runs contact factory for details.

NOTE: The above diagrams are intended to show electrical pathways between luminaires and ancillary device. These diagrams are not intended to show type or colour of cord / wire, luminaire input voltage rating, wire gauge or approved use of the cord / wire supplied with luminaires.

Network Topology - Non-Dimmable

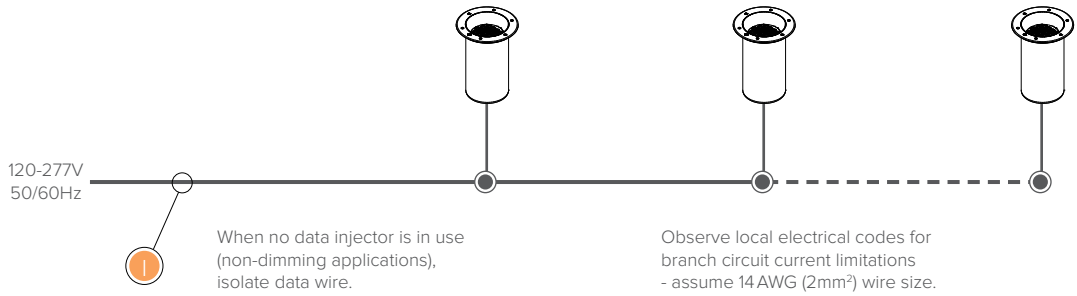

Up to 45 luminaires per run under the following conditions:

- Refer to 'Maximum Circuit Load' table for circuit limitations
- Always observe local electrical codes for branch circuit current limitations

Maximum Current

≤16.0A through cables and connectors supplied by Lumascape
≤12.8A applies to connectorised installations in North America

Connection Type

Circuits can be configured as either connectorised or hardwired. For details consult installation instructions and comply with local electrical codes.

Maximum Circuit Load

Maximum Number of Interconnected Fixtures		
Voltage	12.8A	16A
120V	45	45
240V	45	45
277V	45	45

Refer to PowerSync™ installation manual for maximum distance information and typology options.

All connectorised options in North America are limited to 12.8A branch circuit load.

For non-continuous runs contact factory for details.

NOTE: The above diagrams are intended to show electrical pathways between luminaires and ancillary device. These diagrams are not intended to show type or colour of cord / wire, luminaire input voltage rating, wire gauge or approved use of the cord / wire supplied with luminaires.

The Erden E8 is a high-powered inground uplighter that combines technology and performance in a modern form factor. Available in white, colour changing and tunable white light engines, the Erden E8 is packed with features including EasyGlow™ visual comfort and CoolDrive™ thermal management technologies. PowerSync™ allows for highly granular digital control via common protocols using mains voltage. CoolDrive™ active thermal management engages as internal temperatures increase to keep light output consistent. Only under extreme conditions will the luminaire take control and dim the output gradually and smoothly. Lighting professionals now have greater creative flexibility with the choice of designer* and standard LED options.

*Reduces colour-over-angle separation, fewer striations in the beam and shorter blending distances.

Performance

Static White & Colour	Lumen Output (lm)	Efficacy (lm/W)	Peak Intensity (cd)
2,700 K (80 CRI)	2,896	81.9	56,633
3,000 K (80 CRI)	3,003	82.4	58,288
3,500 K (80 CRI)	3,270	89.8	63,469
4,000 K (80 CRI)	3,338	92.4	69,598
5,000 K (70 CRI)	3,545	98.7	71,832
Red	-	-	-
Green	-	-	-
Blue	-	-	-

Static white lumen output values are based on a 10° standard lens.

Dynamic Colour	Lumen Output (lm)	Efficacy (lm/W)	Peak Intensity (cd)
RGBA	-	-	-
RGBW	-	-	-
RGB(1)	-	-	-

(1) RGB available on request.

Tunable White	Lumen Output (lm)	Efficacy (lm/W)	Peak Intensity (cd)
2,700 K - 6,500 K	-	-	-

Optical

Beam Angles	Light Engine	Series	Beam Angles
	Static White & Single Colour	Standard	10°, 15°, 30°, 45°, 60° x 10°, 40° x 10°, 40° x 20°, 60° x 20°
		Designer(1)	6°, 15°, 30°, 45°, 60°, 60° x 10°, 40° x 10°, 40° x 20°, 60° x 20°
	Dynamic Colour	Designer(1)	6°, 15°, 30°, 45°, 60°, 60° x 10°, 40° x 10°, 40° x 20°, 60° x 20°
	Tunable White	Designer(1)	6°, 15°, 30°, 45°, 60°, 60° x 10°, 40° x 10°, 40° x 20°, 60° x 20°

(1) Significantly reduces colour-over-angle separation, fewer striations in the beam and shorter blending distances.

powersync™ easyglow™ cooldrive™

humantouch™ gripglass™ opticlear™ microantileach™

Electrical

LED Power	30W
Consumption	≤40W maximum
Lifetime (L70)	>60,000hrs (B10, L70, TM21)
Input Voltage	120-277V, 50/60Hz
Thermal Management	CoolDrive™ onboard thermal monitoring and control.

Control

Interface	Lumascape PowerSync™
Protocols	DMX/RDM, Artnet, PWM[1], 0-10V (sink or source)[1] Some protocols require additional hardware. For details and for other available protocols contact factory. 1. Not available for Colour Changing
PWM Frequency	2,000Hz flicker free dimming to 0.1%
Systems	Range of third-party controllers

Physical

Housing	316 Marine Grade Stainless Steel housing, high strength glass with 4,200kg (9,259lb) static load rating (when used in conjunction with LS640-K), teflon coated cover screws. 316 Marine Grade Stainless Steel cover (polished or brushed finish). Other finish options by request.
Finish	Superior 9-step powder-coating process, including marine epoxy undercoat and polyester top coat.
Installation	Pre-Installation Blockout for concrete pour, drive-over and general use applications Mounting Collar for decks and grates Direct Burial for landscapes, planters and special applications (consult factory)
Mounting Accessories	LS640-K Pre-Installation Concete Blockout LS640-2 Mounting Collar for decks and grates
Adjustable	+20°, -5° tilt, 360° rotation
Ambient Operating Temperature	-20°C to 50°C (-4°F to 122°F)
Surface Temperature	≤65°C (149°F)
Weight	6.8kg (15.0lb)

Certification & Compliance

IP Rating	IP68
IK Rating	IK10
Environment	Dry, Damp, Wet locations Inherently Protected Suitable for use in poured concrete
Certifications	ETL, CE, RCM, CCC

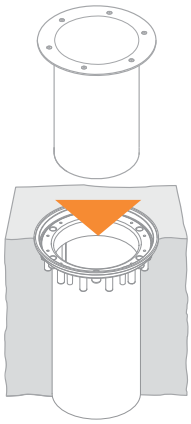

Pre-Installation Blockout

This type of installation requires the LS640-K Pre-Installation Kit (order separately) which acts as a concrete blockout and is intended for installation before the luminaire. This method ensures the luminaire itself is not damaged during concreting or other site works.

Use for	☐ Drive over applications ☐ General use applications ☐ Concrete pour applications where luminaire is to be installed after site work has been completed
Benefits	☐ Easy removal for servicing
Restrictions	☐ Connection Type 82 only available for North American market
Accessories	☐ LS640-K Pre-Installation Blockout

Connection type '84'

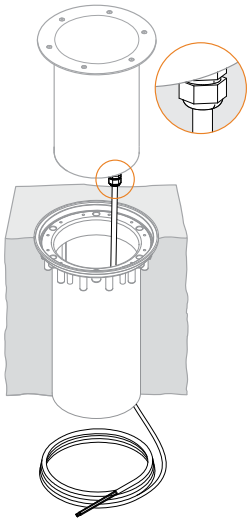

Flexible Cable

For connections to the branch circuit via junction box (by others) or other approved method. 2m (6.5') length. For other length options, consult factory.

Connection type '77'

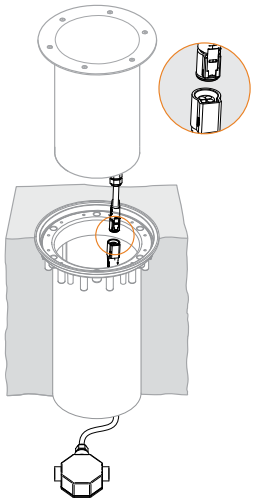

IP68 Connector & Junction Box

The luminaire is fitted with an IP68 connector, which attaches directly to the cable supplied with LS640-K without the use of any tools. The cable is 1m (3') in length and is factory assembled with a j-box.

Connection type '82'

North American market only

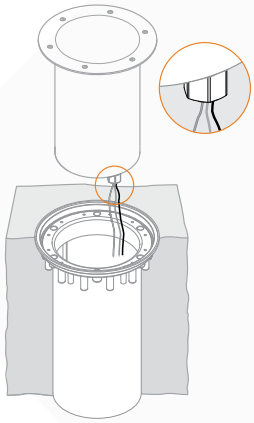

½" NPT Adapter

The luminaire is factory-fitted with 2.0m (6.5') hookup wire. Ensure terminations can be made within this length. For other length options, consult factory.

Specification

Use the table below to specify your Pre-Installation Blockout.

LS640-K	

Connection Type	Code
Flexible cable, single entry, for hard wired installations or hook-up wire and 1/2" NPT, single entry, for hard wired installations	84
Flexible cable, single entry, for connectorised installations	77

For other cable entry options contact factory.

Flush Cover Options

Flush covers for pre-installation use special seals and support bushes to ensure static loads up to 4,200kg (9,259lb) are properly supported. In order to achieve this drive-over rating, OptiClear™ or GripGlass™ must be used.

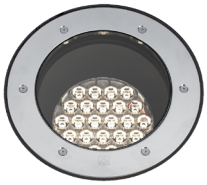

Pre-Installation Blockout Round Flush Cover

- SS316: Polished
- SS316: Brushed

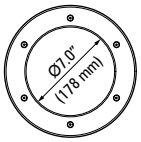

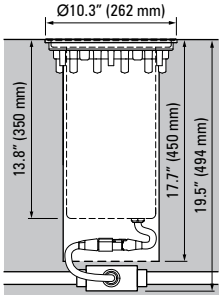

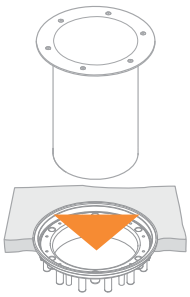

Mounting Collar for Deck and Grates

This type of installation requires the LS640-2 Mounting Collar (order separately) which supports the installation in decks, grates and hollow floors with sufficient ventilation.

Use for	☐ Decks and grates ☐ Hollow floors with sufficient ventilation
Benefits	☐ Easy installation in decks, grates and hollow floors
Restrictions	☐ Only available with Connection Type 84
Accessories	☐ LS640-2 Mounting Collar

Connection type '84'

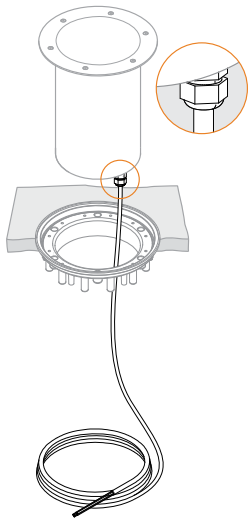

Flexible Cable

For connections to the branch circuit via junction box (by others) or other approved method. 2m (6.5') length. For other length options, consult factory.

Flush Cover Options

Flush covers for mounting collar use special seals and support bushes.

Mounting Collar Round Flush Cover

- SS316: Polished
- SS316: Brushed

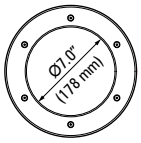

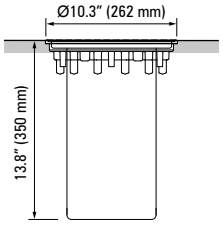

Specification

Use the table below to specify the Mounting Collar for Decks & Grates.

LS640-2	84

Connection Type	Code
Flexible cable, single entry, for hard wired installations	84

For other cable entry options contact factory.

Pre Installation Specification

LS3080	30							24	Q		

Series	Code
Designer	D
Standard	S

Housing Depth	Code
Pre-Install Blockout 450mm (17.7")	24
Mounting Collar 350mm (13.8")	24

Static White & Colour	Code
2,700 K (80 CRI)	827
3,000 K (80 CRI)	830
3,500 K (80 CRI)	835
4,000 K (80 CRI)	840
5,000 K (70 CRI)	750
Red	RED
Green	GRN
Blue	BLU

Standard	Designer	Code
N/A	6°	VN
10°	N/A	NR
15°	15°	NM
30°	30°	ME
45°	45°	WD
N/A	60°	WF
60° x 10°	60° x 10°	LH
10° x 60°	10° x 60°	LV
40° x 10°	40° x 10°	NH
10° x 40°	10° x 40°	NV
40° x 20°	40° x 20°	MH
20° x 40°	20° x 40°	MV
60° x 20°	60° x 20°	WH
20° x 60°	20° x 60°	WV

Cable Entry	Code
Bottom	Q

Input Voltage	Code
110-240V, 50/60Hz	01[1]
120-277V, 50/60Hz	09[2]

(1) International market

(2) North American market

Control	Code
Non-Dim	ND[1]
Powersync™	PS[2]

(1) For single colour, non-dimming applications only.

(2) Required for all dimming and colour changing applications. LS6540 Data Injector required - order separately

Dynamic Colour	Code
RGBA	4CA
RGBW	4CW
RGB	RGB[1]

(1) Available on request

Tunable White	Code
2,700 K - 6,500 K	2WT

Designer	Code
6°	VN
15°	NM
30°	ME
45°	WD
60°	WF
60° x 10°	LH
10° x 60°	LV
40° x 10°	NH
10° x 40°	NV
40° x 20°	MH
20° x 40°	MV
60° x 20°	WH
20° x 60°	WV

Lens	Code
OptiClear™	A
GripGlass™	G

Cover	Code
Stainless steel, polished	M
Stainless steel, brushed	N

Connection Type	Code
Flexible cable, single entry, for hard wired installations	84
Flexible cable, single entry, for connectorised installations	77
Hookup wire and 1/2" NPT, single entry, for hard wired installations	82[2]

(1) North American market only

For other cable entry options contact factory.

Beam Orientations

Beam Orientation for the "LH", "NH", "MH" and "WH" optical system

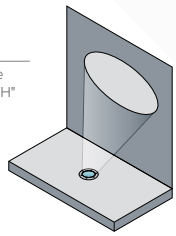

Beam Orientations

Beam Orientation for the "LV", "NV", "MV" and "WV" optical system

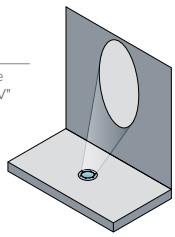

Google TC Monument
California, USA

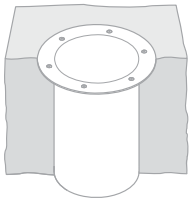

Direct Burial

Luminaire is put directly into soil or concrete.

Use for	☐ Landscaping areas ☐ Applications where depth is restricted ☐ Rated for use in concrete pour applications ☐ Economical option
Benefits	☐ Allows for maximum heat dissipation
Restrictions	☐ Not as easy to remove for service as pre-install version ☐ Not suitable for drive-over (Requires Pre-Installation) ☐ Not available with Connection Type 97 (Requires Pre-Installation) ☐ Connection Type 82 only available for North American market

Connection type '84'

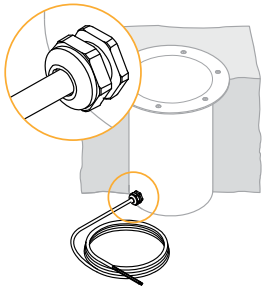

Flexible Cable

For connections to the branch circuit via junction box (by others) or other approved method. 2m (6.5') length. For other length options, consult factory.

Connection type '81'

International market only

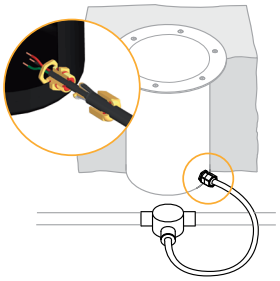

Armored Cable & Junction Box

The luminaire is factory-fitted with a 0.6m (2') armored cable. Ensure terminations can be made within this length. For other length options, consult factory.

Connection type '82'

North American market only

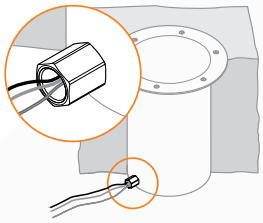

½" NPT Adapter

The luminaire is factory-fitted with 2.0m (6.5') hookup wire. Ensure terminations can be made within this length. For other length options, consult factory.

Recessed Cover Options

Use recessed cover for installation in soil, grass, pavers and other uneven surfaces where no cover overhang is desired.

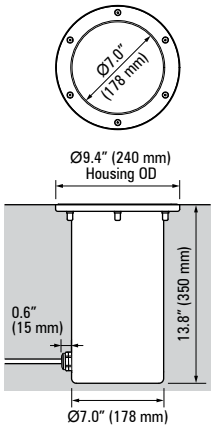

Recessed Cover

- SS316: Polished
- SS316: Brushed

Flush Cover Options

Use flush covers for installation in fine finished surfaces such as granite and marble. They can also be used in some suspended applications. The flush cover will conceal gaps between the luminaire and the surrounding surface.

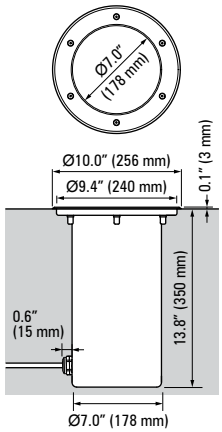

Round Flush Cover

- SS316: Polished
- SS316: Brushed

Direct Burial Specification

LS3080	30							25			

Series	Code
Designer	D
Standard	S

Housing Depth	Code
Direct Burial 350mm (13.8")	25

Static White & Colour	Code
2,700 K (80 CRI)	827
3,000 K (80 CRI)	830
3,500 K (80 CRI)	835
4,000 K (80 CRI)	840
5,000 K (70 CRI)	750
Red	RED
Green	GRN
Blue	BLU

Standard	Designer	Code
N/A	6°	VN
10°	N/A	NR
15°	15°	NM
30°	30°	ME
45°	45°	WD
N/A	60°	WF
60° x 10°	60° x 10°	LH
10° x 60°	10° x 60°	LV
40° x 10°	40° x 10°	NH
10° x 40°	10° x 40°	NV
40° x 20°	40° x 20°	MH
20° x 40°	20° x 40°	MV
60° x 20°	60° x 20°	WH
20° x 60°	20° x 60°	WV

Cable Entry	Code
Side	N
Bottom	Q

Input Voltage	Code
110-240V, 50/60Hz	01[1]
120-277V, 50/60Hz	09[2]

(1) International market
(2) North American market

Control	Code
Non-Dim	ND[1]
Powersync™	PS[2]

(1) For single colour, non-dimming applications only.
(2) Required for all dimming and colour changing applications. LS6540 Data Injector required - order separately

Dynamic Colour	Code
RGBA	4CA
RGBW	4CW
RGB	RGB[1]

(1) Available on request

Tunable White	Code
2,700 K - 6,500 K	2WT

Designer	Code
6°	VN
15°	NM
30°	ME
45°	WD
60°	WF
60° x 10°	LH
10° x 60°	LV
40° x 10°	NH
10° x 40°	NV
40° x 20°	MH
20° x 40°	MV
60° x 20°	WH
20° x 60°	WV

Lens	Code
OptiClear™	A
GripGlass™	G

Cover	Code
Recessed type, stainless steel, polished	B
Recessed type, stainless steel, brushed	H
Round flush type, stainless steel, polished	D
Round flush type, stainless steel, brushed	I

Connection Type	Code
Flexible cable, single entry, for hard wired installations	84
Armoured cable and junction box	81[1]
IP68 connectror and junction box, for connectorised installations	77[1]
Hookup wire and 1/2" NPT, single entry, for hard wired installations	82[2]

(1) International market only
(2) North American market only
For other cable entry options contact factory.

Beam Orientations

Beam Orientation for the "NH", "MH" and "WH" optical system

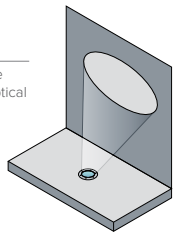

Beam Orientations

Beam Orientation for the "NV", "MV" and "WV" optical system

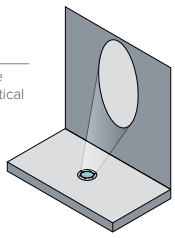

Network Topology - PowerSync™ Dimmable

PowerSync™ Topology 1 - Single Trunk Cable

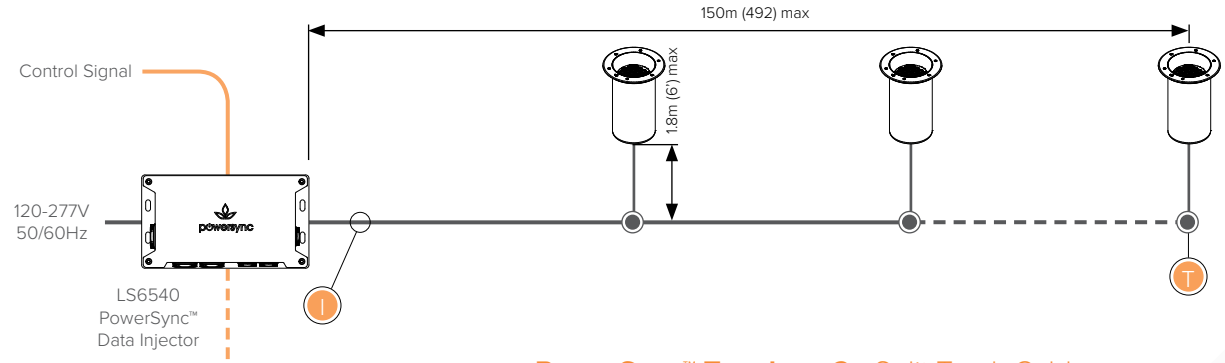

PowerSync™ Topology 2 - Split Trunk Cable

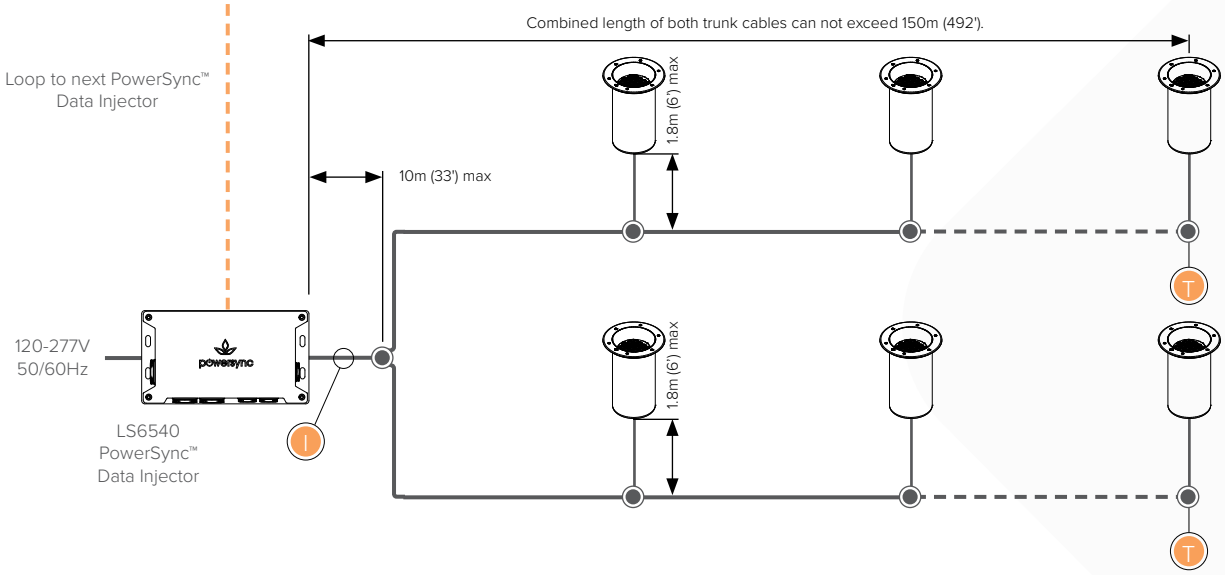

Up to 45 luminaires per run under the following conditions:

- Max total cable run length 150m (492') in up to two trunk cables
- Refer to 'Maximum Circuit Load' table for circuit limitations
- Always observe local electrical codes for branch circuit current limitations
- For run length in excess of 30m (100') use a wire size not lower than 14 AWG

Terminator

Use PowerSync™ terminator, supplied with leader cable to terminate last luminaire in chain.

Maximum Current

≤16.0A through cables and connectors supplied by Lumascape
≤12.8A applies to connectorised installations in North America

Connection Type

Circuits can be configured as either connectorised or hardwired. For details consult installation instructions and comply with local electrical codes.

Maximum Circuit Load

Maximum Number of Interconnected Fixtures		
Voltage	12.8A	16A
120V	41	45
240V	45	45
277V	45	45

Refer to PowerSync™ installation manual for maximum distance information and typology options.

All connectorised options in North America are limited to 12.8A branch circuit load.

For non-continuous runs contact factory for details.

NOTE: The above diagrams are intended to show electrical pathways between luminaires and ancillary device. These diagrams are not intended to show type or colour of cord / wire, luminaire input voltage rating, wire gauge or approved use of the cord / wire supplied with luminaires.

Network Topology - Non-Dimmable

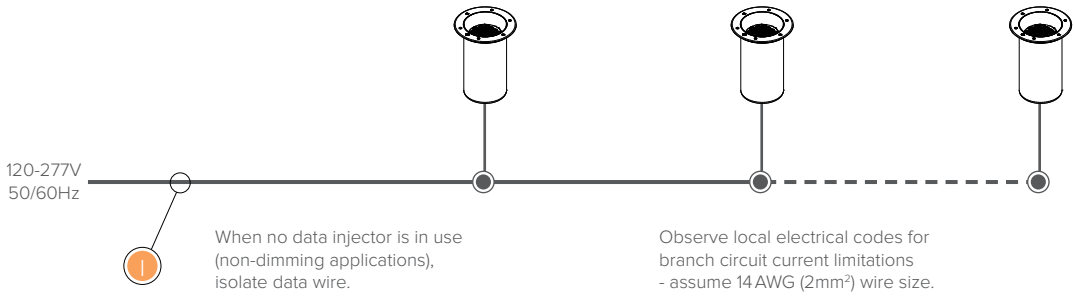

Up to 45 luminaires per run under the following conditions:

- Refer to 'Maximum Circuit Load' table for circuit limitations
- Always observe local electrical codes for branch circuit current limitations

Maximum Current

≤16.0A through cables and connectors supplied by Lumascape
≤12.8A applies to connectorised installations in North America

Connection Type

Circuits can be configured as either connectorised or hardwired. For details consult installation instructions and comply with local electrical codes.

Maximum Circuit Load

Maximum Number of Interconnected Fixtures		
Voltage	12.8A	16A
120V	41	45
240V	45	45
277V	45	45

Refer to PowerSync™ installation manual for maximum distance information and typology options.

All connectorised options in North America are limited to 12.8A branch circuit load.

For non-continuous runs contact factory for details.

NOTE: The above diagrams are intended to show electrical pathways between luminaires and ancillary device. These diagrams are not intended to show type or colour of cord / wire, luminaire input voltage rating, wire gauge or approved use of the cord / wire supplied with luminaires.

The Woda W3 represents the next generation in Lumascape underwater luminaires. The luminaire takes performance and control technology to a new level, whist leveraging the industry leading reliability of the Lumascape brand. The Woda W3 is a powerful LED fixture with exceptional light output and is available in a wide variety of optical configurations including narrow spot and bi-symmetrical distributions. The luminaire has a wide variety of colour temperatures and is constructed from cast brass ideally suited for the underwater environment. Lighting professionals now have greater creative flexibility with the choice of designer* and standard LED options.

*Reduces colour-over-angle separation, fewer striations in the beam and shorter blending distances.

Performance

Static White & Colour	Lumen Output (lm)	Efficacy (lm/W)	Peak Intensity (cd)
2,700 K (80 CRI)	3,176	92	59,081
3,000 K (80 CRI)	3,322	96	60,439
3,500 K (80 CRI)	3,504	101	64,564
4,000 K (80 CRI)	3,650	105	67,909
5,000 K (70 CRI)	4,307	124	69,946
Red	-	-	-
Green	-	-	-
Blue	-	-	-

Static white lumen output values are based on a 10° standard lens.

Dynamic Colour	Lumen Output (lm)	Efficacy (lm/W)	Peak Intensity (cd)
RGBA	-	-	-
RGBW	2,147	62	11,878
RGB(1)	-	-	-

Dynamic colour lumen output values based on an 6° designer lens.
(1) RGB available on request.

Tunable White	Lumen Output (lm)	Efficacy (lm/W)	Peak Intensity (cd)
2,700 K - 6,500 K	-	-	-

powersync™ easyglow™ cooldrive™

Performance

Beam Angles	Light Engine	Series	Beam Angles
	Static White & Single Colour	Standard	10°, 15°, 30°, 45°, 60° x 10°, 40° x 10°, 40° x 20°, 60° x 20°
		Designer (1)	6°, 15°, 30°, 45°, 60°, 60° x 10°, 40° x 10°, 40° x 20°, 60° x 20°
	Dynamic Colour	Designer (1)	6°, 15°, 30°, 45°, 60°, 60° x 10°, 40° x 10°, 40° x 20°, 60° x 20°
	Tunable White	Designer (1)	6°, 15°, 30°, 45°, 60°, 60° x 10°, 40° x 10°, 40° x 20°, 60° x 20°

(1) Significantly reduces colour-over-angle separation, fewer striations in the beam and shorter blending distances.

Electrical

LED Power	32W
Consumption	≤35W maximum
Lifetime (L70)	>60,000hrs (B10, L70, TM21)
Input Voltage	Low Voltage 30V DC
Thermal Management	CoolDrive™ onboard thermal monitoring and control.

Control

Interface	Lumascape PowerSync™
Protocols	DMX/RDM, Artnet, PWM(1), 0-10V (sink or source)(1) Some protocols require additional hardware. For details and for other available protocols contact factory. 1. Not available for Colour Changing
PWM Frequency	2,000Hz flicker free dimming to 0.1%
Systems	Range of third-party controllers

Physical

Housing	Cast brass, tempered glass lens, stainless steel fasteners, constant torque adjustable mounting bracket (lockable and reversible)
Finish	Natural brass and black epoxy top coat
Installation	Surface-mounted
Adjustable	Constant torque adjustable mounting bracket, lockable and reversible
Ambient Operating Temperature	-20°C to +40°C (-4°F to 104°F)
Water Temperature Rating	5°C to +40°C (41°F to 104°F)
Surface Temperature	≤59°C (138°F)
Weight	6.5kg (14.5lb)

Certification & Compliance

IP Rating	IP68 to 1.8m (6')
IK Rating	IK9
Environment	Submersible fountains, Wet / Dry Locations
Certifications	ETL, CE, RCM

Luminaire Dimensions

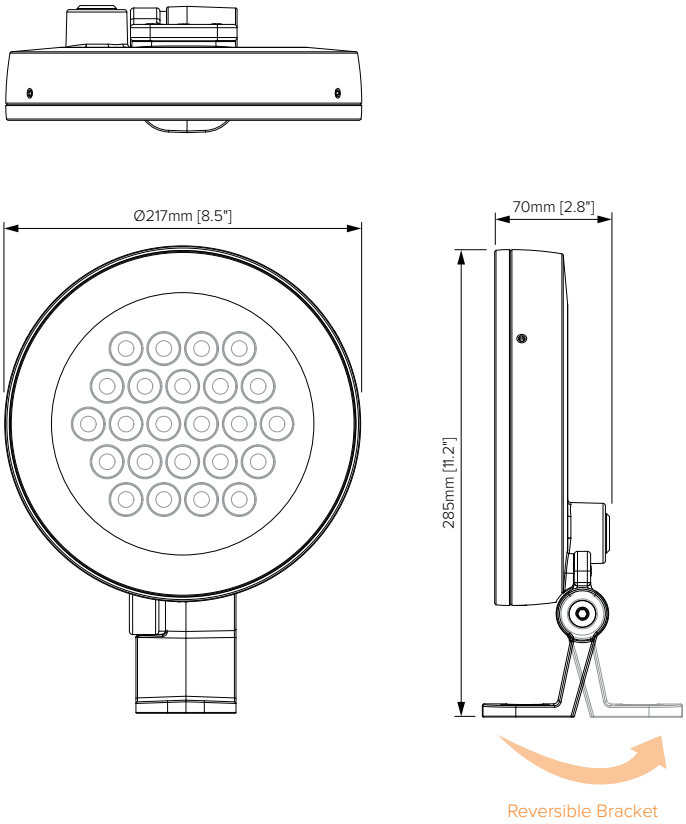

Bracket Dimensions

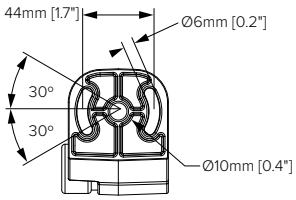

Luminaire Rotation

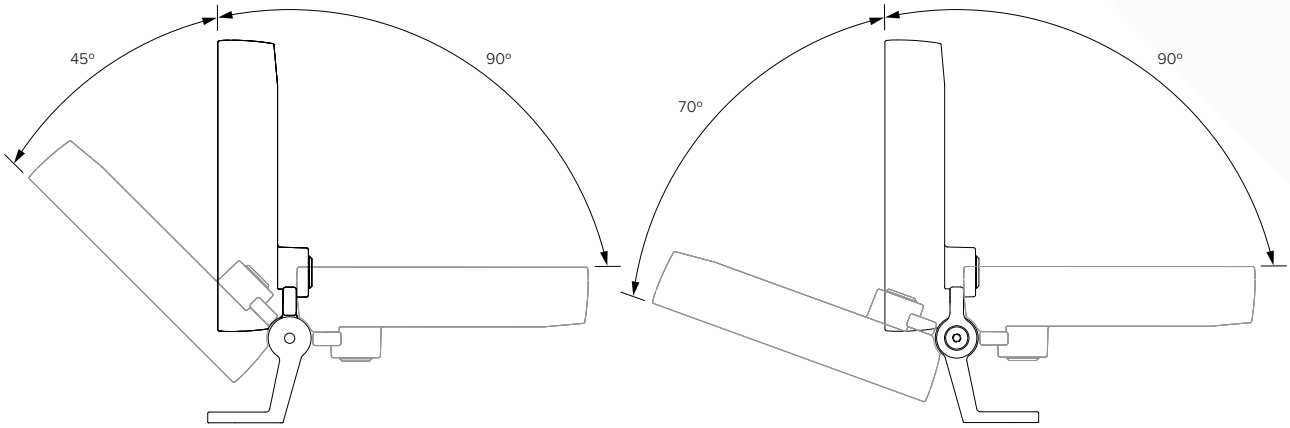

LS5030	32			84					

Power	Code
32W	32

Series	Code
Designer	D
Standard	S

Static White & Colour	Code
2,700 K (80 CRI)	827
3,000 K (80 CRI)	830
3,500 K (80 CRI)	835
4,000 K (80 CRI)	840
5,000 K (70 CRI)	750
Red	RED
Green	GRN
Blue	BLU

Standard	Designer	Code
N/A	6°	VN
10°	N/A	NR
15°	15°	NM
30°	30°	ME
45°	45°	WD
N/A	60°	WF
60° x 10°	60° x 10°	LH
10° x 60°	10° x 60°	LV
40° x 10°	40° x 10°	NH
10° x 40°	10° x 40°	NV
40° x 20°	40° x 20°	MH
20° x 40°	20° x 40°	MV
60° x 20°	60° x 20°	WH
20° x 60°	20° x 60°	WV

Dynamic Colour	Code
RGBA	4CA
RGBW	4CW
RGB	RGB[1]

(1) Available on request

Designer	Code
6°	VN
15°	NM
30°	ME
45°	WD
60°	WF
60° x 10°	LH
10° x 60°	LV
40° x 10°	NH
10° x 40°	NV
40° x 20°	MH
20° x 40°	MV
60° x 20°	WH
20° x 60°	WV

Tunable White	Code
2,700 K - 6,500 K	2WT

Designer	Code
6°	VN
15°	NM
30°	ME
45°	WD
60°	WF
60° x 10°	LH
10° x 60°	LV
40° x 10°	NH
10° x 40°	NV
40° x 20°	MH
20° x 40°	MV
60° x 20°	WH
20° x 60°	WV

Connection Type	Code
Flexible cable, single entry, for hard wired installations	84

Input Voltage	Code
30V DC	07[1]
30V DC	13[2]

(1) International market

(2) North American market

Control	Code
Non-Dim	ND[1]
Powersync™	PS[2]

(1) For single colour, non-dimming applications only.

(2) Required for all dimming and colour changing applications. Data Injector required - order separately
LS6510 - North American market
LS6550 - International market

Finish	Code
Epoxy Black	EB
Natural Brass	BR

Cable Length	Code
5m (16')	016
8m (26')	026
10m (32')	032
15m (50')	050
20m (65')	065
25m (82')	082
30m (98')	089

For custom cable length contact factory.

Beam Orientations

Beam Orientation for the "LH", "NH", "MH" and "WH" optical system

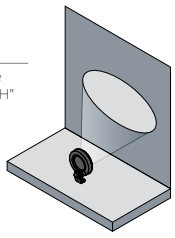

Beam Orientations

Beam Orientation for the "LV", "NV", "MV" and "WV" optical system

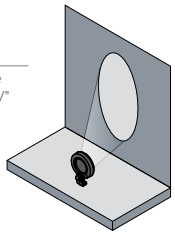

Network Topology - PowerSync™ Dimmable

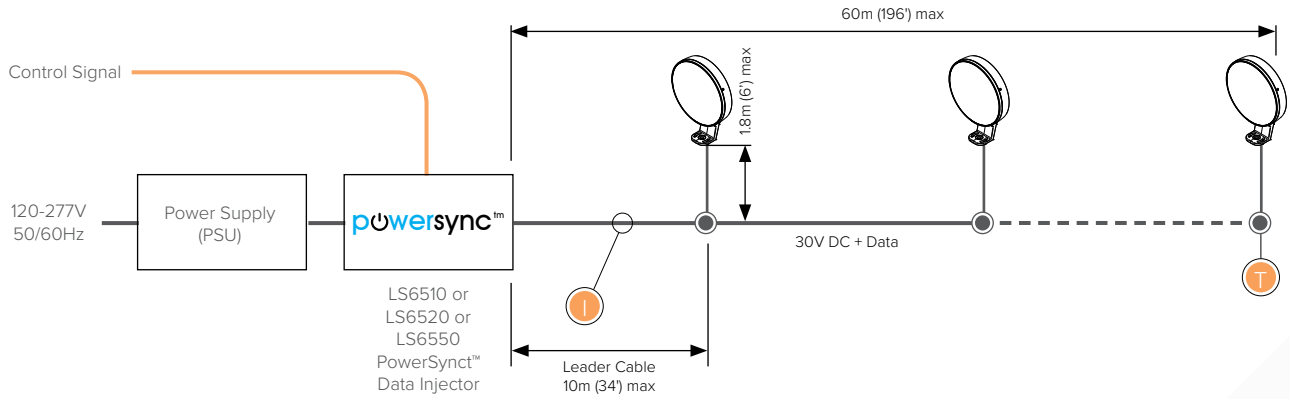

Up to 6 luminaires per run under the following conditions:

- Max total cable run length 60m (196') in up to two trunk cables
- Refer to 'Maximum Circuit Load' table for circuit limitations
- Always observe local electrical codes for branch circuit current limitations

Terminator
Use PowerSync™ terminator, supplied with leader cable to terminate last luminaire in chain.

Maximum Current
≤16.0A - International market
≤12.8A - North American market

Connection Type
Circuits are configured as hardwired. For details consult installation instructions and comply with local electrical codes.

Network Topology - Non-Dimmable

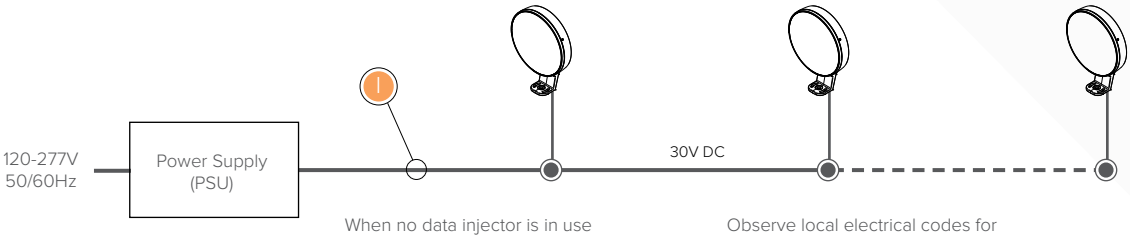

When no data injector is in use (non-dimming applications), isolate data wire.

Observe local electrical codes for branch circuit current limitations - assume 14 AWG (2mm²) wire size.

Up to 6 luminaires per run under the following conditions:

- Refer to 'Maximum Circuit Load' table for circuit limitations
- Always observe local electrical codes for branch circuit current limitations

Max Current
≤16.0A - International market

Connection Type
Circuits are configured as hardwired. For details consult installation instructions and comply with local electrical codes.

Transformer Compatability Table

Maximum Number of Fixtures (International market)	
PSU Power	Luminaire Power (32W)
120W	2
240W	4
320W	6

Refer to PowerSync™ installation manual for maximum distance information and typology options.
For non-continuous runs contact factory for details.

Maximum Number of Fixtures (North American market)	
PSU Power	Luminaire Power (32W)
240W	4

Refer to PowerSync™ installation manual for maximum distance information and typology options.
For non-continuous runs contact factory for details.

NOTE: The above diagrams are intended to show electrical pathways between luminaires and ancillary device. These diagrams are not intended to show type or colour of cord / wire, luminaire input voltage rating, wire gauge or approved use of the cord / wire supplied with luminaires.

Woda W3

Business Park
Australia

The Woda W7 represents the next generation in Lumascape underwater luminaires. The luminaire takes performance and control technology to a new level, whist leveraging the industry leading reliability of the Lumascape brand. The Woda W7 is a powerful LED fixture with exceptional light output and is available in a wide variety of optical configurations including narrow spot and bi-symmetrical distributions. The luminaire has a wide variety of colour temperatures and is constructed from cast brass ideally suited for the underwater environment.

Performance

Static White & Colour	Lumen Output (lm)	Efficacy (lm/W)	Peak Intensity (cd)
2,700 K (80 CRI)	6,980	90.6	127,401
3,000 K (80 CRI)	7,301	90.6	127,401
3,500 K (80 CRI)	7,702	98.7	138,726
4,000 K (80 CRI)	8,023	102.2	149,986
5,000 K (70 CRI)	9,467	110.2	161,750
Red	-	-	-
Green	-	-	-
Blue	-	-	-

Static white lumen output values are based on a 10° lens.

Dynamic Colour	Lumen Output (lm)	Efficacy (lm/W)	Peak Intensity (cd)
RGBA	-	-	-
RGBW	4,413	-	-
RGB(1)	-	-	-

Dynamic colour lumen output values based on an 8° lens.
(1) RGB available on request.

Tunable White	Lumen Output (lm)	Efficacy (lm/W)	Peak Intensity (cd)
2,700 K - 6,500 K	-	-	-

powersync™ easyglow™ cooldrive™

Performance

Beam Angles	15°, 30°, 45°, 60° x 10°, 40° x 10°, 40° x 20°, 60° x 20°

Electrical

LED Power	76W
Consumption	≤80W maximum
Lifetime (L70)	>60,000hrs (B10, L70, TM21)
Input Voltage	Low Voltage 30V DC
Thermal Management	CoolDrive™ onboard thermal monitoring and control.

Control

Interface	Lumascape PowerSync™
Protocols	DMX/RDM, Artnet, PWM[1], 0-10V (sink or source)[1] Some protocols require additional hardware. For details and for other available protocols contact factory. 1. Not available for Colour Changing
PWM Frequency	2,000Hz flicker free dimming to 0.1%
Systems	Range of third-party controllers

Physical

Housing	Cast brass, tempered glass lens, stainless steel fasteners, constant torque adjustable mounting bracket (lockable and reversible)
Finish	Natural brass and black epoxy top coat
Installation	Surface-mounted
Adjustable	Constant torque adjustable mounting bracket, lockable and reversible
Water Temperature Rating	5°C to +40°C (41°F to 104°F)
Surface Temperature	59°C (≤138°F)
Weight	6.5kg (14.5lb)

Certification & Compliance

IP Rating	IP68 to 1.8m (6')
IK Rating	IK9
Environment	Submersible fountains
Certifications	ETL, CE, RCM

Luminaire Dimensions

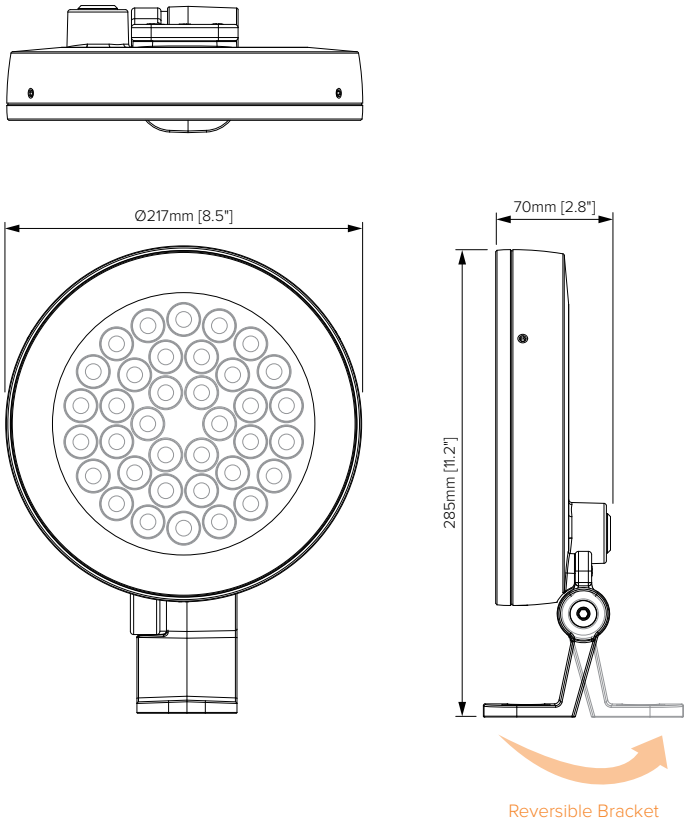

Bracket Dimensions

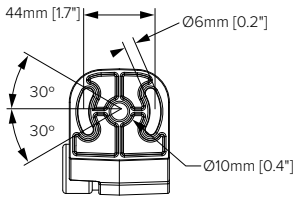

Luminaire Rotation

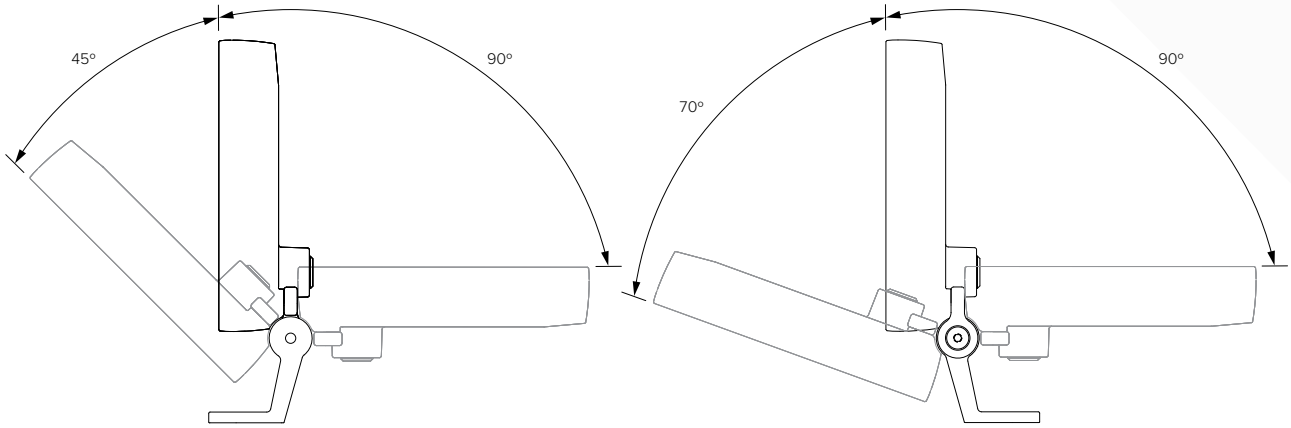

LS5070	76W		84					

Power	Code
76W	76W

Static White & Colour	Code
2,700 K (80 CRI)	827
3,000 K (80 CRI)	830
3,500 K (80 CRI)	835
4,000 K (80 CRI)	840
5,000 K (70 CRI)	750
Red	RED
Green	GRN
Blue	BLU

Dynamic Colour	Code
RGBA	4CA
RGBW	4CW
RGB	RGB(1)

(1) Available on request

Tunable White	Code
2,700 K - 6,500 K	2WT

Connection Type	Code
Flexible cable, single entry, for hard wired installations	84

Beam	Code
15°	NM
30°	ME
45°	WD
60° x 10°	LH
10° x 60°	LV
40° x 10°	NH
10° x 40°	NV
40° x 20°	MH
20° x 40°	MV
60° x 20°	WH
20° x 60°	WV

Input Voltage	Code
30V DC	07(1)
30V DC	13(2)

(1) International market

(2) North American market

Control	Code
Non-Dim	ND(1)
Powersync™	PS(2)

(1) For single colour, non-dimming applications only.

(2) Required for all dimming and colour changing applications. Data Injector required - order separately
LS6510 - North American market
LS6550 - International market

Finish	Code
Epoxy Black	EB
Natural Brass	BR

Cable Length	Code
5m (16')	016
8m (26')	026
10m (32')	032
15m (50')	050
20m (65')	065
25m (82')	082
30m (98')	089

For custom cable length contact factory.

Beam Orientations

Beam Orientation for the "LH", "NH", "MH" and "WH" optical system

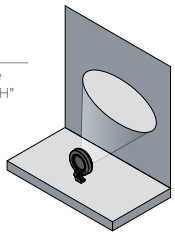

Beam Orientations

Beam Orientation for the "LV", "NV", "MV" and "WV" optical system

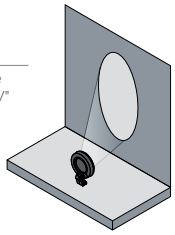

Network Topology - PowerSync™ Dimmable

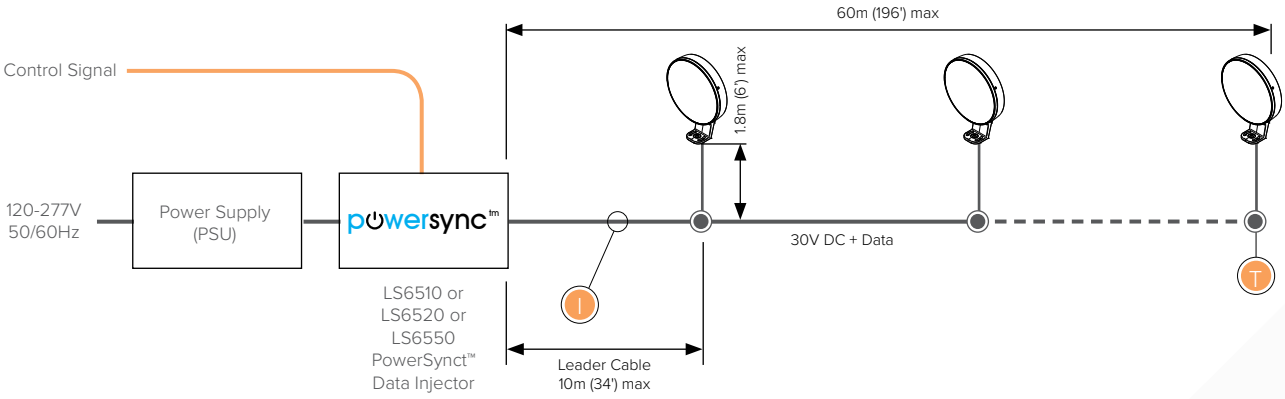

Up to 3 luminaires per run under the following conditions:

- Max total cable run length 60m (196') in up to two trunk cables
- Refer to 'Maximum Circuit Load' table for circuit limitations
- Always observe local electrical codes for branch circuit current limitations

Terminator

Use PowerSync™ terminator, supplied with leader cable to terminate last luminaire in chain.

Maximum Current

≤16.0A - International market
≤12.8A - North American market

Connection Type

Circuits are configured as hardwired. For details consult installation instructions and comply with local electrical codes.

Transformer Compatability Table

Maximum Number of Fixtures (International market)	
PSU Power	Luminaire Power (76W)
120W	1
240W	2
320W	3

Refer to PowerSync™ installation manual for maximum distance information and typology options.

For non-continuous runs contact factory for details.

Maximum Number of Fixtures (North American market)	
PSU Power	Luminaire Power (76W)
240W	2

Refer to PowerSync™ installation manual for maximum distance information and typology options.

For non-continuous runs contact factory for details.

NOTE: The above diagrams are intended to show electrical pathways between luminaires and ancillary device. These diagrams are not intended to show type or colour of cord / wire, luminaire input voltage rating, wire gauge or approved use of the cord / wire supplied with luminaires.

Network Topology - Non-Dimmable

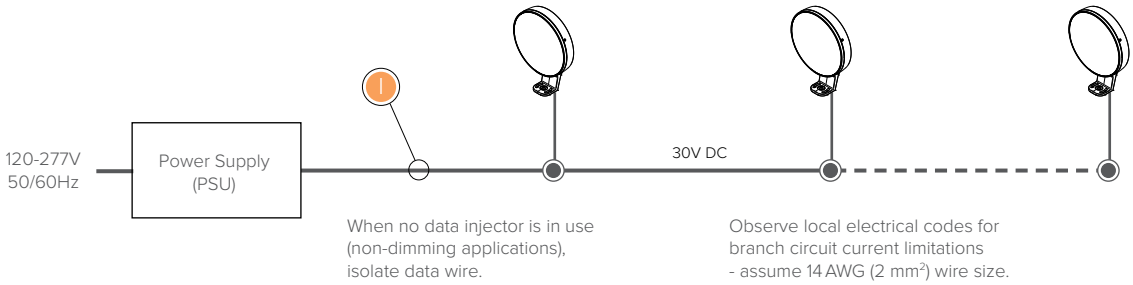

Up to 3 luminaires per run under the following conditions:

- Refer to 'Maximum Circuit Load' table for circuit limitations
- Always observe local electrical codes for branch circuit current limitations

Max Current

≤16.0A - International market
≤12.8A - North American market

Connection Type

Circuits are configured as hardwired. For details consult installation instructions and comply with local electrical codes.

Transformer Compatability Table

Maximum Number of Fixtures (International market)	
PSU Power	Luminaire Power (76W)
120W	1
240W	2
320W	3

Refer to PowerSync™ installation manual for maximum distance information and typology options.

For non-continuous runs contact factory for details.

Maximum Number of Fixtures (North American market)	
PSU Power	Luminaire Power (76W)
240W	2

Refer to PowerSync™ installation manual for maximum distance information and typology options.

For non-continuous runs contact factory for details.

NOTE: The above diagrams are intended to show electrical pathways between luminaires and ancillary device. These diagrams are not intended to show type or colour of cord / wire, luminaire input voltage rating, wire gauge or approved use of the cord / wire supplied with luminaires.

The Nagu N1 is one of the most compact and versatile surface mount luminaires in its class, featuring light output and energy efficiency surpassing 35W Metal Halide. Available in white, colour changing and tunable white light engines, the Nagu N1 is packed with features including EasyGlow™ visual comfort and CoolDrive™ thermal management technologies. PowerSync™ allows for highly granular digital control via common protocols. Unique and flexible mounting and glare control accessories enable installation in multiple orientations including two axes of adjustment, making it ideal for direct or indirect applications.

Performance

Static White & Colour	Lumen Output (lm)	Efficacy (lm/W)	Peak Intensity (cd)
2,700 K (80 CRI)	-	-	-
3,000 K (80 CRI)	1,765	66.8	38,271
3,500 K (80 CRI)	-	-	-
4,000 K (80 CRI)	-	-	-
5,000 K (70 CRI)	-	-	-
Red	-	-	-
Green	-	-	-
Blue	-	-	-

Static white lumen output values are based on a 10° lens.

Dynamic Colour	Lumen Output (lm)	Efficacy (lm/W)	Peak Intensity (cd)
RGBA	-	-	-
RGBW	-	-	-
RGB(1)	-	-	-

(1) RGB available on request.

Tunable White	Lumen Output (lm)	Efficacy (lm/W)	Peak Intensity (cd)
2,700 K - 6,500 K	-	-	-

powersync™ easyglow™ cooldrive™

Performance

Beam Angles	10°, 13°, 20°, 26°, 47°, 40° x 10°, 60° x 20°

Electrical

LED Power	22W
Consumption	≤25W maximum
Lifetime (L70)	>60,000hrs (B10, L70, TM21)
Input Voltage	Mains Voltage 120-277V, 50/60Hz
Thermal Management	CoolDrive™ onboard thermal monitoring and control.

Control

Interface	Lumascape PowerSync™
Protocols	DMX/RDM, Artnet, PWM[1], 0-10 V (sink or source)[1] Some protocols require additional hardware. For details and for other available protocols contact factory. 1. Not available for Colour Changing
PWM Frequency	2,000Hz flicker free dimming to 0.1%
Systems	Range of third-party controllers

Physical

Housing	Die cast marine grade aluminum, tempered glass lens.
Finish	Superior 9-step powder-coating process, including marine epoxy undercoat and polyester top coat.
Installation	Surface-mounted
Adjustable	Constant torque adjustable luminaire head
Ambient Operating Temperature	-40°C to 50°C (-40°F to 122°F)
Surface Temperature	≤59°C (138°F)
Weight	2.0kg (4.5lb)

Certification & Compliance

IP Rating	IP66 / IP67
IK Rating	IK7
Environment	Dry, Damp, Wet locations
Certifications	ETL, CE, RCM, CCC (Pending)

Luminaire Dimensions

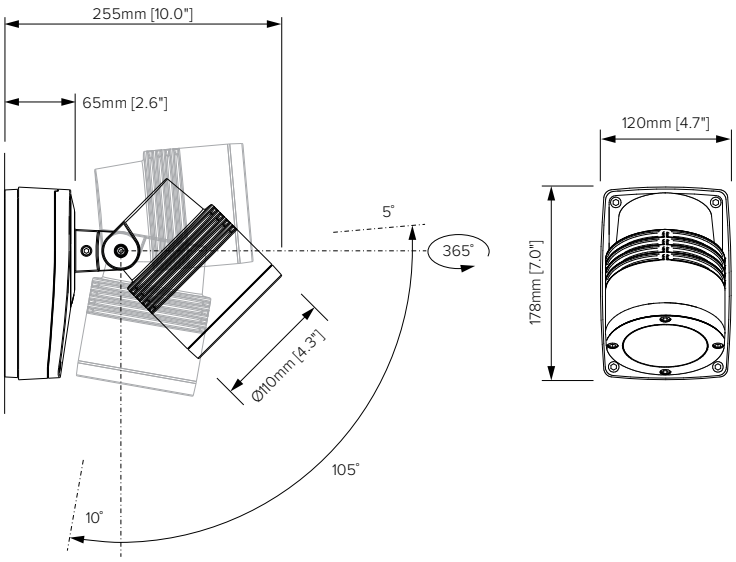

Shielding & Glare Control

LS6104
External Glare Shield

LS1010	22W				PS	

Static White & Colour	Code
2,700 K (80 CRI)	827
3,000 K (80 CRI)	830
3,500 K (80 CRI)	835
4,000 K (80 CRI)	840
5,000 K (70 CRI)	750
Red	RED
Green	GRN
Blue	BLU

Dynamic Colour	Code
RGBA	4CA
RGBW	4CW
RGB	RGB[1]

(1) Available on request

Tunable White	Code
2,700 K - 6,500 K	2WT

Beam	Code
10°	VN
13°	NR
20°	NM
26°	ME
47°	WD
40° x 10°	NH
10° x 40°	NV
60° x 20°	WH
20° x 60°	WV

Input Voltage (Mains)	Code
110-240V, 50/60Hz	01[1]
120-277V, 50/60Hz	09[2]

Finish	Code
Black	BL
Anthracite Grey	AG
Basalt Grey	BT
Anodic Silver	SL
White	WT
Dark Bronze	DB
Latte	LT
Dark Aluminum	DA
Custom RAL	CC[1]

(1) Please provide RAL colour.

LS6104	

Glare Control Accessories	Code
External Glare Shield	LS6104

Finish	Code
Black	BL
Anthracite Grey	AG
Basalt Grey	BT
Anodic Silver	SL
White	WT
Dark Bronze	DB
Latte	LT
Dark Aluminum	DA
Custom RAL	CC[1]

(1) Please provide RAL colour.

Beam Orientations

Beam Orientation for the "NH" and "WH" optical system

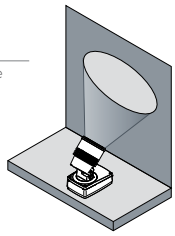

Beam Orientations

Beam Orientation for the "NV" and "WV" optical system

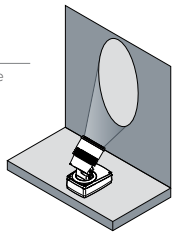

Network Topology - PowerSync™ Dimmable - Mains Voltage

PowerSync™ Topology 1 - Single Trunk Cable

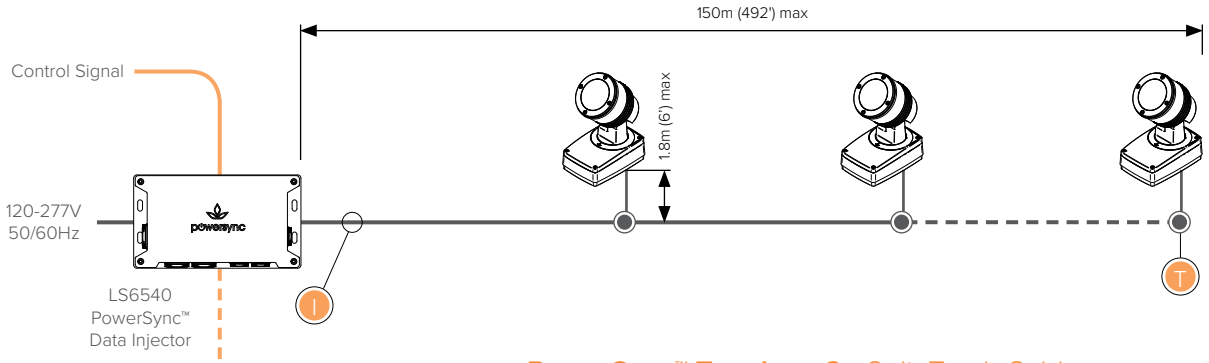

PowerSync™ Topology 2 - Split Trunk Cable

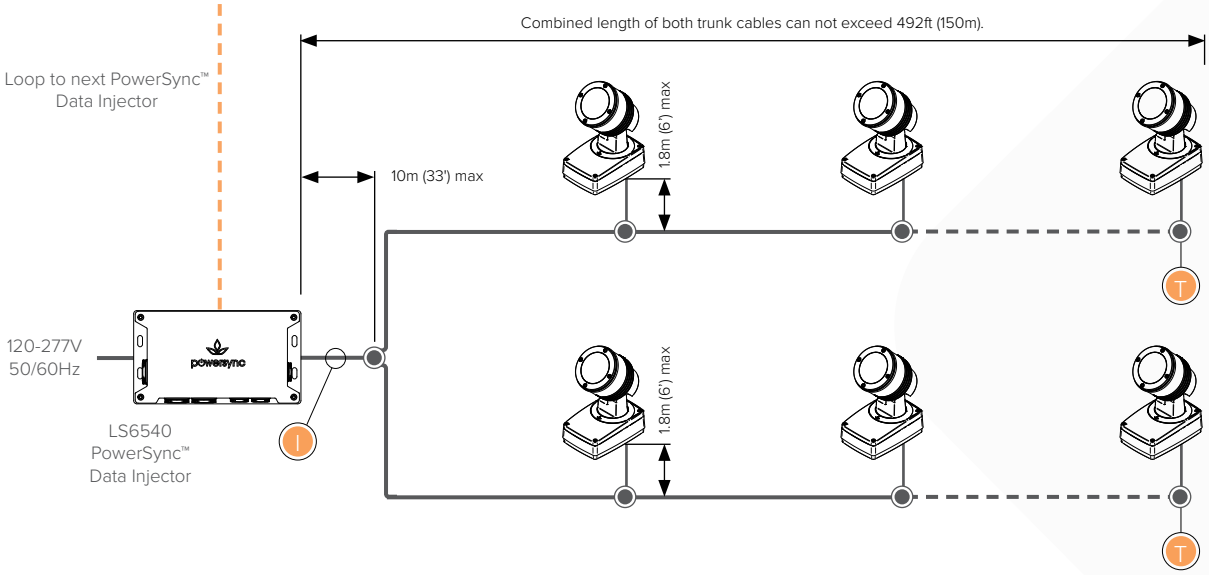

Up to 45 luminaires per run under the following conditions:

- Max total cable run length 150m (492') in up to two trunk cables
- Refer to 'Maximum Circuit Load' table for circuit limitations
- Always observe local electrical codes for branch circuit current limitations
- For run length in excess of 30m (100') use a wire size not lower than 14 AWG

Terminator

Use PowerSync™ terminator, supplied with leader cable to terminate last luminaire in chain.

Maximum Current

Through cables and connectors, using Lumascape supplied jumper and leader cables ≤16.0A.

Connection Type

Circuits can be configured as hardwired. For details consult installation instructions and comply with local electrical codes.

Maximum Circuit Load

Maximum Number of Interconnected Fixtures		
Voltage	12.8A	16A
120V	41	45
240V	45	45
277V	45	45

Refer to PowerSync™ installation manual for maximum distance information and typology options.

For non-continuous runs contact factory for details.

NOTE: The above diagrams are intended to show electrical pathways between luminaires and ancillary device. These diagrams are not intended to show type or colour of cord / wire, luminaire input voltage rating, wire gauge or approved use of the cord / wire supplied with luminaires.

The Stena S1 is one of the most compact and versatile stake mount luminaires in its class, featuring light output and energy efficiency surpassing 35W Metal Halide. Available in white, colour changing and tunable white light engines, the Stena S1 is packed with features including EasyGlow™ visual comfort and CoolDrive™ thermal management technologies. PowerSync™ allows for highly granular digital control via common protocols. Unique and flexible mounting* and glare control accessories enable installation in multiple orientations. Available with a concrete anchor, the height of the luminaire allows the light head to stand above vegetation for an unobstructed cast of light.

*International version shown with concrete anchor point (mounting spike is included).
North American version requires a seperate concrete anchor or mounting spike.

Performance

Static White & Colour	Lumen Output (lm)	Efficacy (lm/W)	Peak Intensity (cd)
2,700 K (80 CRI)	-	-	-
3,000 K (80 CRI)	1,765	66.8	38,271
3,500 K (80 CRI)	-	-	-
4,000 K (80 CRI)	-	-	-
5,000 K (70 CRI)	-	-	-
Red	-	-	-
Green	-	-	-
Blue	-	-	-

Static white lumen output values are based on a 10° lens.

Dynamic Colour	Lumen Output (lm)	Efficacy (lm/W)	Peak Intensity (cd)
RGBA	-	-	-
RGBW	-	-	-
RGB(1)	-	-	-

(1) RGB available on request.

Tunable White	Lumen Output (lm)	Efficacy (lm/W)	Peak Intensity (cd)
2,700 K - 6,500 K	-	-	-

powersync™ easyglow™ cooldrive™

Performance

Beam Angles	10°, 13°, 20°, 26°, 47°, 40° x 10°, 60° x 20°

Electrical

LED Power	22W
Consumption	≤25W maximum
Lifetime (L70)	>60,000hrs (B10, L70, TM21)
Input Voltage	Mains Voltage 120-277V, 50/60Hz
Thermal Management	CoolDrive™ onboard thermal monitoring and control.

Control

Interface	Lumascape PowerSync™
Protocols	DMX/RDM, Artnet, PWM[1], 0-10V (sink or source)[1] Some protocols require additional hardware. For details and for other available protocols contact factory. 1. Not available for Colour Changing
PWM Frequency	2,000Hz flicker free dimming to 0.1%
Systems	Range of third-party controllers

Physical

Housing	Die cast marine grade aluminum, tempered glass lens.
Finish	Superior 9-step powder-coating process, including marine epoxy undercoat and polyester top coat.
Installation	Stake-mounted
Adjustable	Constant torque adjustable luminaire head
Ambient Operating Temperature	-40°C to 50°C (-40°F to 122°F)
Surface Temperature	≤59°C (138°F)
Weight	2.0kg (4.5lb)

Certification & Compliance

IP Rating	IP66 / IP67
IK Rating	IK7
Environment	Dry, Damp, Wet locations
Certifications	ETL, CE, RCM, CCC (Pending)

Luminaire Dimensions

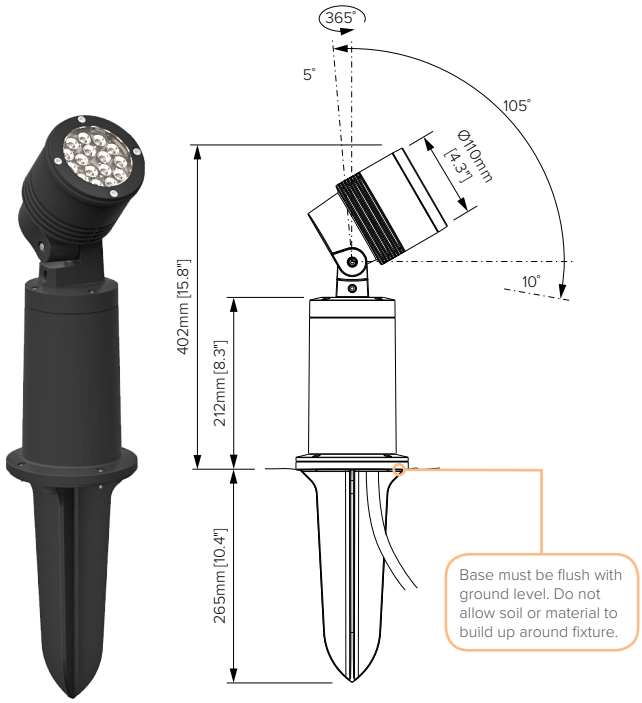

International Market

Includes Mounting Spike / Concrete Anchor

North American Market

Mounting Spike / Concrete Anchor not included (order separately)

Shielding & Glare Control

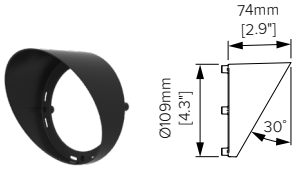

LS6104

External Glare Shield

Mounting Accessories (North American Market only)

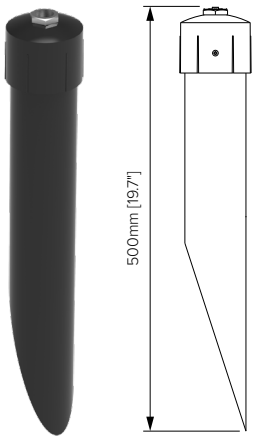

LS6054

Mounting Spike / Concrete Anchor not included (order separately)

LS2010	22W					PS		

Static White & Colour	Code
2,700 K (80 CRI)	827
3,000 K (80 CRI)	830
3,500 K (80 CRI)	835
4,000 K (80 CRI)	840
5,000 K (70 CRI)	750
Red	RED
Green	GRN
Blue	BLU

Dynamic Colour	Code
RGBA	4CA
RGBW	4CW
RGB	RGB[1]

(1) Available on request

Tunable White	Code
2,700 K - 6,500 K	2WT

Beam	Code
10°	VN
13°	NR
20°	NM
26°	ME
47°	WD
40° x 10°	NH
10° x 40°	NV
60° x 20°	WH
20° x 60°	WV

Finish	Code
Black	BL
Anthracite Grey	AG
Basalt Grey	BT
Anodic Silver	SL
White	WT
Dark Bronze	DB
Latte	LT
Dark Aluminum	DA
Custom RAL	CC[1]

(1) Please provide RAL colour.

Cable Length	Code
2m (6')	006
5m (16')	016
8m (26')	026
15m (49')	049

For custom cable length contact factory.

Input Voltage (Mains)	Code
110-240V, 50/60Hz	01[1]
120-277V, 50/60Hz	09[2]

Connection Type	Code
Flexible cable, single entry, for hard wired installations	84[2]
Flexible cable, single entry, for connectorised installations	77[1][2]
Hookup wire and 1/2" NPT, single entry, for hard wired installations	82[3]

For other cable entry options contact factory

(1) Not available for Low Voltage (LV) input

(2) International market

(3) North American market

LS6104	

Glare Control Accessories	Code
External Glare Shield	LS6104

Finish	Code
Black	BL
Anthracite Grey	AG
Basalt Grey	BT
Anodic Silver	SL
White	WT
Dark Bronze	DB
Latte	LT
Dark Aluminum	DA
Custom RAL	CC[1]

(1) Please provide RAL colour.

Mounting Accessories	Code
Mounting Spike / Concrete Anchor	LS6054[1]

(1) North American Market

Beam Orientations

Beam Orientation for the "NH" and "WH" optical system

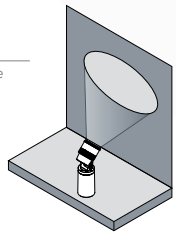

Beam Orientations

Beam Orientation for the "NV" and "WV" optical system

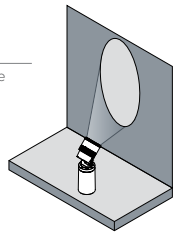

Network Topology - PowerSync™ Dimmable - Mains Voltage

PowerSync™ Topology 1 - Single Trunk Cable

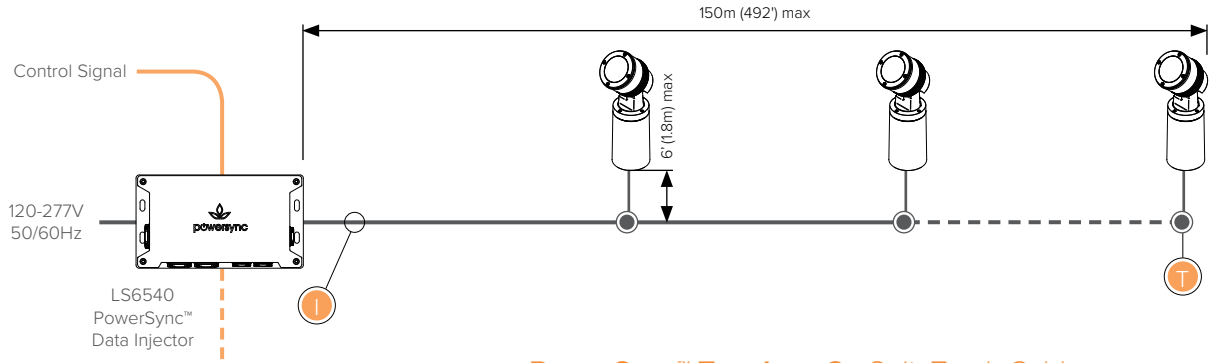

PowerSync™ Topology 2 - Split Trunk Cable

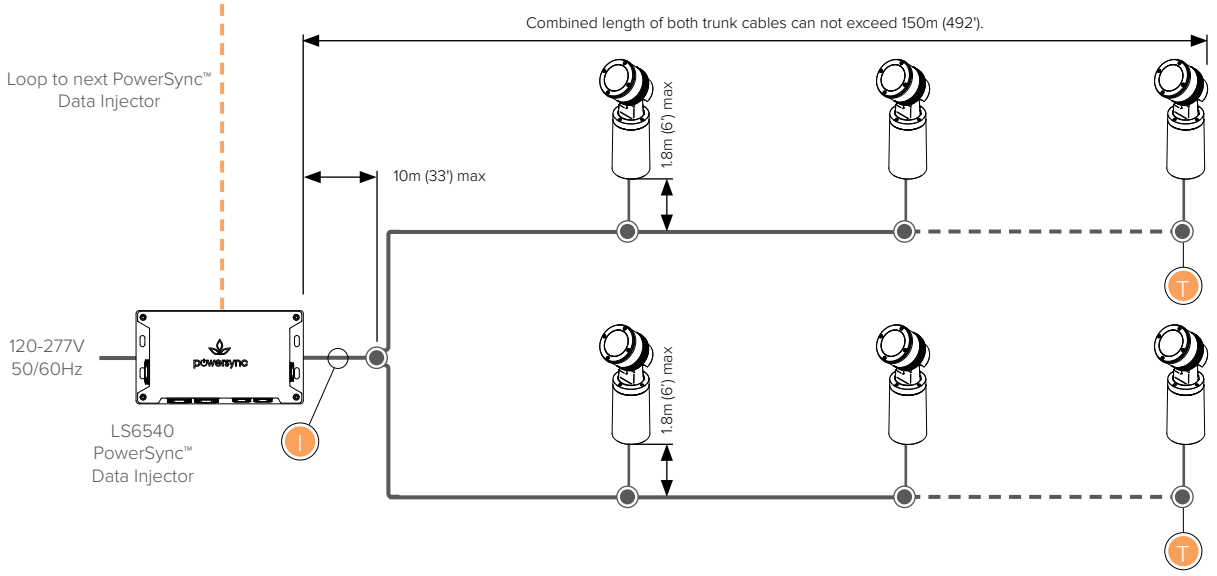

Up to 45 luminaires per run under the following conditions:

- Max total cable run length 150m (492') in up to two trunk cables
- Refer to 'Maximum Circuit Load' table for circuit limitations
- Always observe local electrical codes for branch circuit current limitations
- For run length in excess of 30m (100') use a wire size not lower than 14 AWG

Terminator
Use PowerSync™ terminator, supplied with leader cable to terminate last luminaire in chain.

Maximum Current
Through cables and connectors, using Lumascape supplied jumper and leader cables ≤16.0A.

Connection Type
Circuits can be configured as hardwired. For details consult installation instructions and comply with local electrical codes.

Maximum Circuit Load

Maximum Number of Interconnected Fixtures		
Voltage	12.8A	16A
120V	41	45
240V	45	45
277V	45	45

Refer to PowerSync™ installation manual for maximum distance information and typology options.

For non-continuous runs contact factory for details.

NOTE: The above diagrams are intended to show electrical pathways between luminaires and ancillary device. These diagrams are not intended to show type or colour of cord / wire, luminaire input voltage rating, wire gauge or approved use of the cord / wire supplied with luminaires.

The Stena S2 is one of the most compact and versatile surface mount luminaires in its class, featuring light output and energy efficiency surpassing 35W Metal Halide. Available in white, colour changing and tunable white light engines, the Stena S2 is packed with features including EasyGlow™ visual comfort and CoolDrive™ thermal management technologies. PowerSync™ allows for highly granular digital control via common protocols. The height of the luminaire allows the light head to stand above vegetation for an unobstructed cast of light.

Performance

Static White & Colour	Lumen Output (lm)	Efficacy (lm/W)	Peak Intensity (cd)
2,700 K (80 CRI)	-	-	-
3,000 K (80 CRI)	1,765	66.8	38,271
3,500 K (80 CRI)	-	-	-
4,000 K (80 CRI)	-	-	-
5,000 K (70 CRI)	-	-	-
Red	-	-	-
Green	-	-	-
Blue	-	-	-

Static white lumen output values are based on a 10° lens.

Dynamic Colour	Lumen Output (lm)	Efficacy (lm/W)	Peak Intensity (cd)
RGBA	-	-	-
RGBW	-	-	-
RGB(1)	-	-	-

(1) RGB available on request.

Tunable White	Lumen Output (lm)	Efficacy (lm/W)	Peak Intensity (cd)
2,700 K - 6,500 K	-	-	-

powersync™ easyglow™ cooldrive™

Performance

Beam Angles	10°, 13°, 20°, 26°, 47°, 40° x 10°, 60° x 20°

Electrical

LED Power	22W
Consumption	≤25W maximum
Lifetime (L70)	>60,000hrs (B10, L70, TM21)
Input Voltage	Mains Voltage 120-277V, 50/60Hz
Thermal Management	CoolDrive™ onboard thermal monitoring and control.

Control

Interface	Lumascape PowerSync™
Protocols	DMX/RDM, Artnet, PWM[1], 0-10V (sink or source)[1] Some protocols require additional hardware. For details and for other available protocols contact factory. 1. Not available for Colour Changing
PWM Frequency	2,000Hz flicker free dimming to 0.1%
Systems	Range of third-party controllers

Physical

Housing	Die cast marine grade aluminum, tempered glass lens.
Finish	Superior 9-step powder-coating process, including marine epoxy undercoat and polyester top coat.
Installation	Surface-mounted
Adjustable	Constant torque adjustable luminaire head
Ambient Operating Temperature	-40°C to 50°C (-40°F to 122°F)
Surface Temperature	≤59°C (138°F)
Weight	2.0kg (4.5lb)

Certification & Compliance

IP Rating	IP66 / IP67
IK Rating	IK7
Environment	Dry, Damp, Wet locations
Certifications	ETL, CE, RCM, CCC (Pending)

Luminaire Dimensions

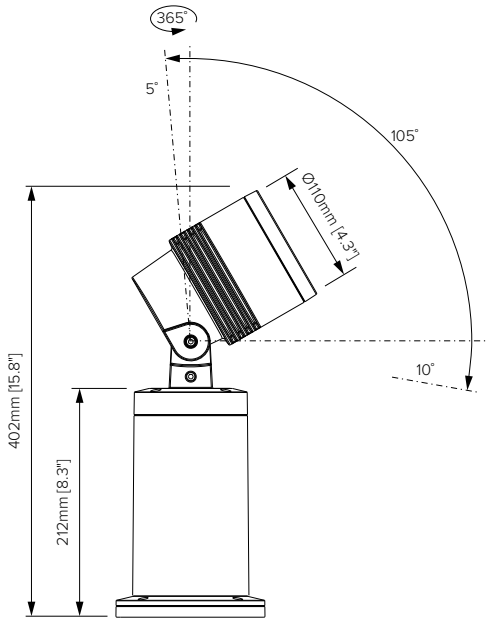

Shielding & Glare Control

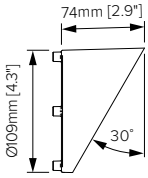

LS6104
External Glare Shield

LS2020	22W				PS	

Static White & Colour	Code
2,700 K (80 CRI)	827
3,000 K (80 CRI)	830
3,500 K (80 CRI)	835
4,000 K (80 CRI)	840
5,000 K (70 CRI)	750
Red	RED
Green	GRN
Blue	BLU

Dynamic Colour	Code
RGBA	4CA
RGBW	4CW
RGB	RGB(1)

(1) Available on request

Tunable White	Code
2,700 K - 6,500 K	2WT

Beam	Code
10°	VN
13°	NR
20°	NM
26°	ME
47°	WD
40° x 10°	NH
10° x 40°	NV
60° x 20°	WH
20° x 60°	WV

Input Voltage (Mains)	Code
110-240V, 50/60Hz	01(1)
120-277V, 50/60Hz	09(2)

Finish	Code
Black	BL
Anthracite Grey	AG
Basalt Grey	BT
Anodic Silver	SL
White	WT
Dark Bronze	DB
Latte	LT
Dark Aluminum	DA
Custom RAL	CC(1)

(1) Please provide RAL colour.

LS6104	

Glare Control Accessories	Code
External Glare Shield	LS6104

Finish	Code
Black	BL
Anthracite Grey	AG
Basalt Grey	BT
Anodic Silver	SL
White	WT
Dark Bronze	DB
Latte	LT
Dark Aluminum	DA
Custom RAL	CC(1)

(1) Please provide RAL colour.

Beam Orientations

Beam Orientation for the "NH" and "WH" optical system

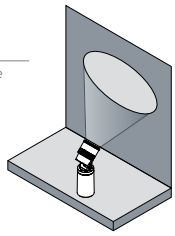

Beam Orientations

Beam Orientation for the "NV" and "WV" optical system

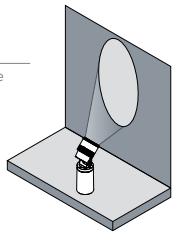

Network Topology - PowerSync™ Dimmable - Mains Voltage

PowerSync™ Topology 1 - Single Trunk Cable

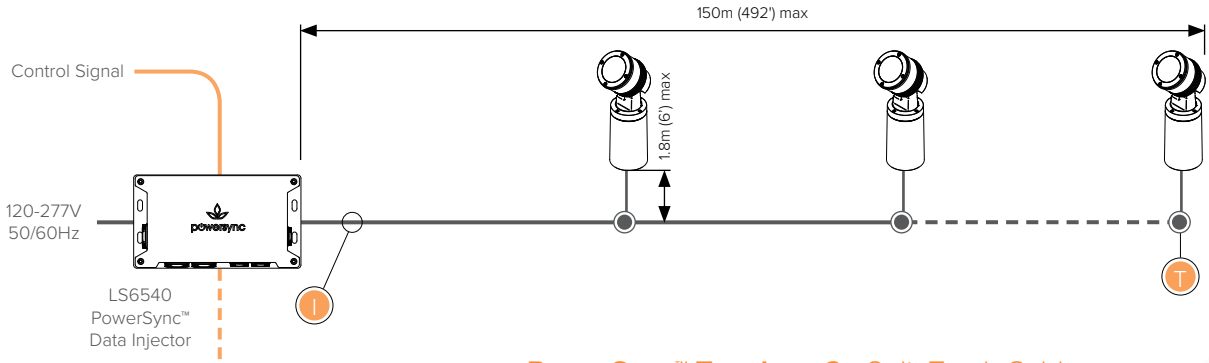

PowerSync™ Topology 2 - Split Trunk Cable

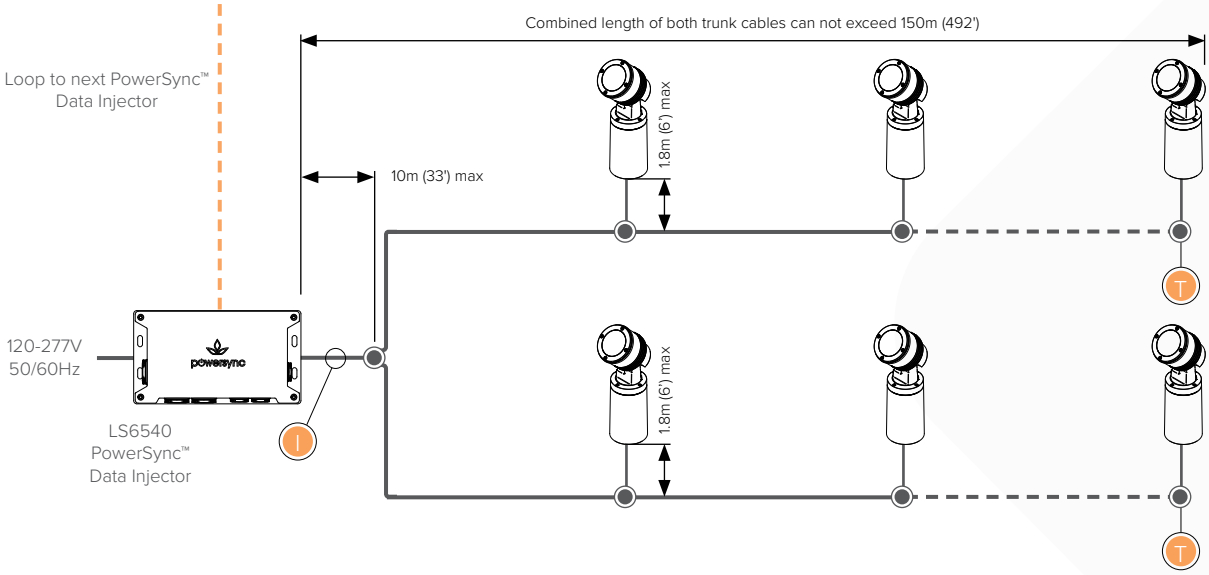

Up to 45 luminaires per run under the following conditions:

- Max total cable run length 150m (492') in up to two trunk cables
- Refer to 'Maximum Circuit Load' table for circuit limitations
- Always observe local electrical codes for branch circuit current limitations
- For run length in excess of 30m (100') use a wire size not lower than 14 AWG

T Terminator

Use PowerSync™ terminator, supplied with leader cable to terminate last luminaire in chain.

I Maximum Current

Through cables and connectors, using Lumascape supplied jumper and leader cables ≤16.0A.

Connection Type

Circuits can be configured as hardwired. For details consult installation instructions and comply with local electrical codes.

Maximum Circuit Load

Maximum Number of Interconnected Fixtures		
Voltage	12.8A	16A
120V	41	45
240V	45	45
277V	45	45

Refer to PowerSync™ installation manual for maximum distance information and typology options.

For non-continuous runs contact factory for details.

NOTE: The above diagrams are intended to show electrical pathways between luminaires and ancillary device. These diagrams are not intended to show type or colour of cord / wire, luminaire input voltage rating, wire gauge or approved use of the cord / wire supplied with luminaires.

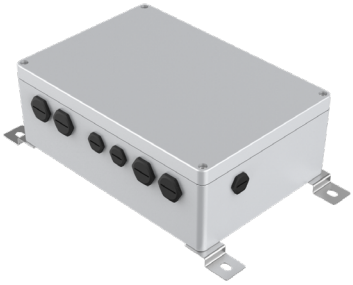

The LS6510 combines power and dimming control into a single convenient unit. Specifically approved for pool, spa and fountain luminaires up to 30V DC, the LS6510 accepts 0-10V or DMX protocols, with the ability to fine tune dimming output. This makes it easier to use with many other manufacturer's luminaires, as well as the complete suite of Lumascape underwater luminaires. The diecast aluminium housing features a 9-step surface treatment process, including two layers of powder coat, making the LS6510 perfect for poolside locations or other locations where corrosion/exposure is of concern. The LS6510 conforms to the UL379 pool, spa and fountain power unit standard, making it the ideal solution for a wide range of underwater lighting projects.

Electrical

Input Voltage	110-240V, 50/60Hz (International Market) 120V, 50/60Hz (North American Market)
Output Voltage	24V DC 30V DC
Output Power	120W 240W
Efficiency (typ)	92.5%
Electrical Connections	Line Voltage In (2+E), 1 x #10 (6mm^2), 2 x #16 (1.5mm^2) Low Voltage Out, 1 x #10 (6mm^2), 2 x #16 (1.5mm^2)
Entries (CE)	2 x M20 (threaded) - Power in / out 2 x M20 (threaded) - Low Voltage out 2 x M12 - Data / control looping (dimmable models)
Entries (UL / ETL)	2 x $^3/_4$" - Power in / out 2 x $^3/_4$" (threaded) - Low Voltage out 2 x $^1/_2$" - Data / control looping (dimmable models)

Control

Protocols	0-10V - (10%) Input for controlling PWM or PowerSync™ luminaires. DMX / RDM Input for controlling PWM or PowerSync™ luminaires. Configurable PWM output orientation and frequency.

Physical

Housing	Diecast Aluminium, Stainless Steel hardware
Finish	Powder coated
Installation	Surface-mounted
Ambient Operating Temperature	-40°C to 50°C (-40°F to 122°F)
Weight	6.0kg (13.2lb)

Certification & Compliance

IP Rating	IP65
Environment	Dry, Damp, Wet locations
Certifications	UL379 - Power Unit for Fountian, Swimming Pool and Spa (Pending)

powersync™

Dimensions

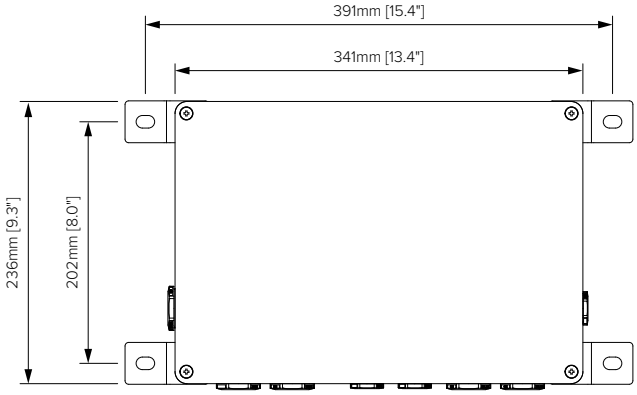

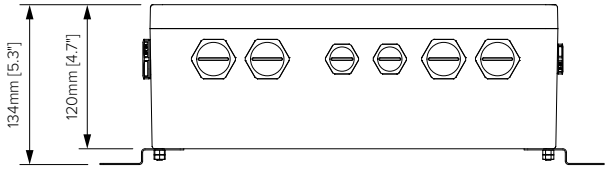

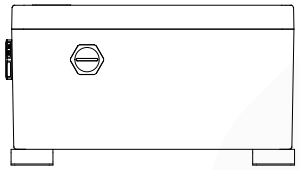

LS6510 [ ] [ ] [ ] [ ] [ ]

Power	Code
24V	24V
30V	30V

Wattage	Code
240W	240W

Voltage	Code
110-240V, 50/60 Hz	01[1]
120V, 50/60 Hz	04[2]

(1) International market
(2) North American market

Control	Code
DMX / RDM and 0-10V input. For controlling PWM luminaires	DX
DMX / RDM and 0-10V input. For controlling PowerSync™ luminaires	PD

Finish	Code
Black	BL
Anthracite Grey	AG
Basalt Grey	BT
Anodic Silver	SL
White	WT
Dark Bronze	DB
Latte	LT
Dark Aluminum	DA
Custom RAL	CC[1]

(1) Please provide RAL colour.

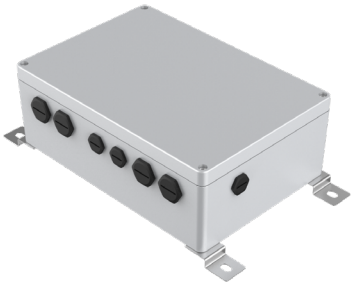

The LS6520 combines power and dimming control into a single convenient unit. Specifically approved for low voltage LED luminaires up to 30V DC, the LS6520 accepts 0-10V or DMX protocols, with the ability to fine tune dimming output. This makes it easier to use with many other manufacturer's luminaires, as well as the complete suite of Lumascape underwater luminaires. The diecast aluminium housing features a 9-step surface treatment process, including two layers of powder coat, making the LS6520 perfect for poolside locations or other locations where corrosion/exposure is of concern.

Electrical

Input Voltage	110-240V, 50/60Hz (International Market) 120-277V, 50/60Hz (North American Market)
Output Voltage	24V DC 30V DC
Output Power	120W 240W 320W
Efficiency (typ)	92.5%
Electrical Connections	Line Voltage In (2+E), 1 x #10 (6mm^2), 2 x #16 (1.5mm^2) Low Voltage Out, 1 x #10 (6mm^2), 2 x #16 (1.5mm^2)
Entries (CE)	2 x M20 (threaded) - Power in / out 2 x M20 (threaded) - Low Voltage out 2 x M12 - Data / control looping (dimmable models)
Entries (UL / ETL)	2 x $^3/_4$" - Power in / out 2 x $^3/_4$" (threaded) - Low Voltage out 2 x $^1/_2$" - Data / control looping (dimmable models)

Control

Protocols	0-10V - (10%) Input for controlling PWM or PowerSync™ luminaires. DMX / RDM Input for controlling PWM or PowerSync™ luminaires. Configurable PWM output orientation and frequency.

Physical

Housing	Diecast Aluminium, Stainless Steel hardware
Finish	Powder coated
Installation	Surface-mounted
Ambient Operating Temperature	-40°C to 50°C (-40°F to 122°F)
Weight	6.0kg (13.2lb)

Certification & Compliance

IP Rating	IP65
Environment	Dry, Damp, Wet locations
Certifications	UL 2108 - Listed Power Unit (Pending)

powersync™

Dimensions

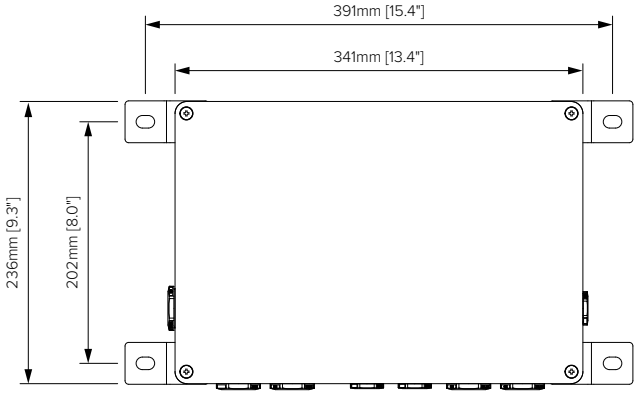

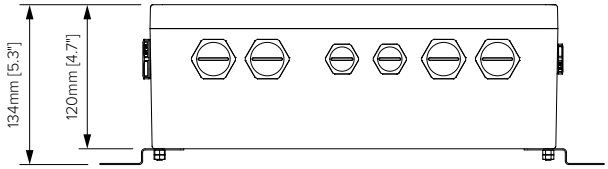

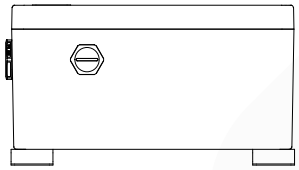

LS6520 [ ] [ ] [ ] [ ] [ ]

Power	Code
24V	24V
30V	30V

Wattage	Code
120W	120W
240W	240W
320W	320W

Voltage	Code
110-240V, 50/60 Hz	01[1]
120-277V, 50/60 Hz	09[2]

(1) International market
(2) North American market

Control	Code
DMX / RDM and 0-10V input. For controlling PWM luminaires	DX
DMX / RDM and 0-10V input. For controlling PowerSync™ luminaires	PD

Finish	Code
Black	BL
Anthracite Grey	AG
Basalt Grey	BT
Anodic Silver	SL
White	WT
Dark Bronze	DB
Latte	LT
Dark Aluminum	DA
Custom RAL	CC[1]

(1) Please provide RAL colour.

The PowerSync™ Data Injector combines the convenience of standard wiring methods to translate control signals into a digital format that can be transmitted over standard copper wire. This allows highly granular addressing and high speed digital control of every luminaire, using only four wires. The PowerSync™ Data Injector accepts a growing list of standard protocols (0-10 V, DMX / RDM), for simple integration with a wide selection of control systems using these industry standard protocols.

Electrical

Input Voltage	110-240V, 50/60Hz (International Market) 120-277V, 50/60Hz (North American Market)
Unit Power Consumption	< 5W (max)
Connected Current	16A (max)
Electrical Connections	Line Voltage In (2+E) PowerSync™ Out (2+E+Data)
Entries (North American Market)	3 x ¾"" clearance for Power In/PowerSync™ out 3 x ½" clearance for Data/control looping
Entries (International Market)	3 x M20 (threaded) for Power In/PowerSync™ out 3 x M12 (threaded) for Data/control looping

Control

Interface	Lumascape PowerSync™
Protocols	DMX / RDM, Artnet, PWM[1], 0 - 10V (sink or source)[1] Some protocols require additional hardware. For details and for other available protocols contact factory. 1. Not available for Colour Changing.
PWM Frequency	2,000Hz flicker free dimming to 0.1%
Systems	Range of third-party controllers

Physical

Housing	Die cast marine grade aluminum
Finish	Superior 9-step powder-coating process, including marine epoxy undercoat and polyester top coat.
Installation	Surface-mounted
Mounting Hole Pattern	9.45" x 1.97" (240mm x 50mm)
Mounting Hole Size	Clearance for 1/4" (M6)
Ambient Operating Temperature	-40°C to 50°C (-40°F to 122°F)
Weight	3.6kg (8.0lb)

Certification & Compliance

IP Rating	IP66
Environment	Dry, Damp, Wet locations
Certifications	UL, CE, RCM

Dimensions

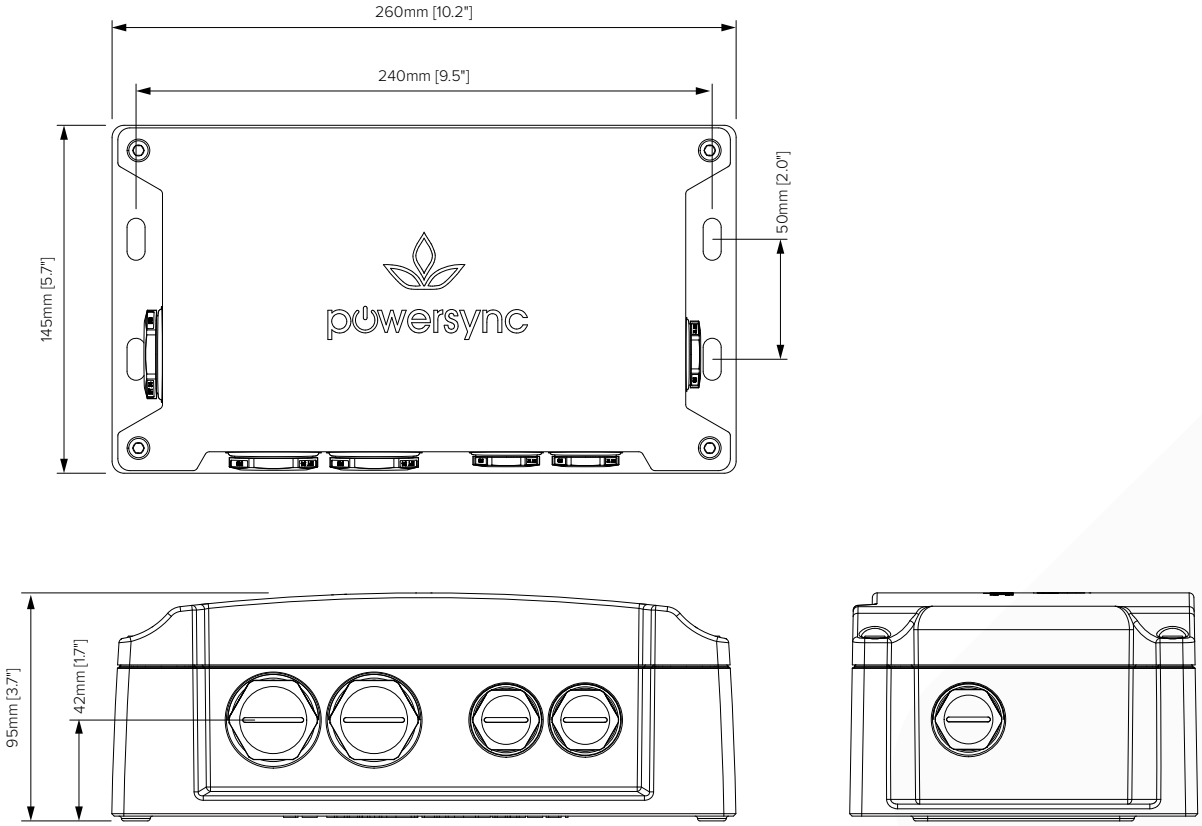

Order Code

LS6540 [ ] [ ] [ ]

Input Voltage	Code
110-240V, 50/60Hz	01[1]
120-277V, 50/60Hz	09[2]

(1) International market
(2) North American market

Control	Code
DMX / RDM Wireless DMX (CRMX) 0-10 V (sink or source) [1]	PD

For other protocols contact factory
(1) Not suitable for Dynamic Colour control

Finish	Code
Black	BL
Anthracite Grey	AG
Basalt Grey	BT
Anodic Silver	SL
White	WT
Dark Bronze	DB
Latte	LT
Dark Aluminum	DA
Custom RAL	CC[1]

(1) Please provide RAL colour.

Network Topology - PowerSync™ Dimmable

PowerSync™ Topology 1 - Single Trunk Cable

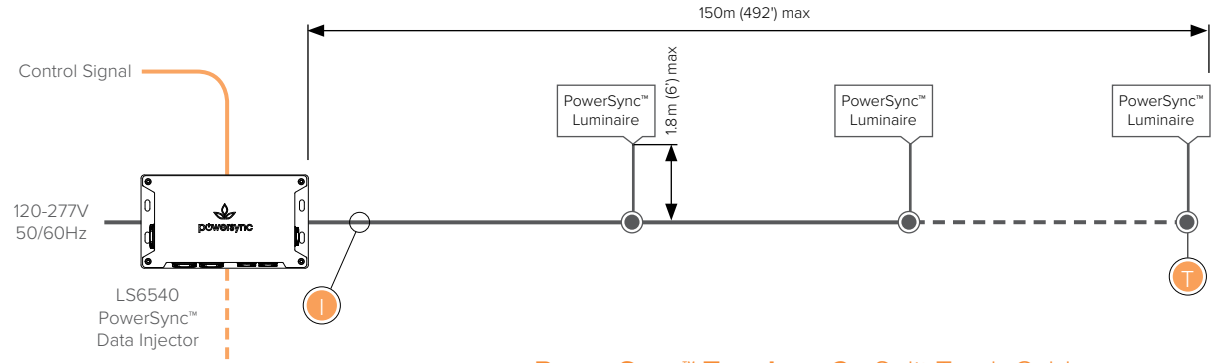

PowerSync™ Topology 2 - Split Trunk Cable

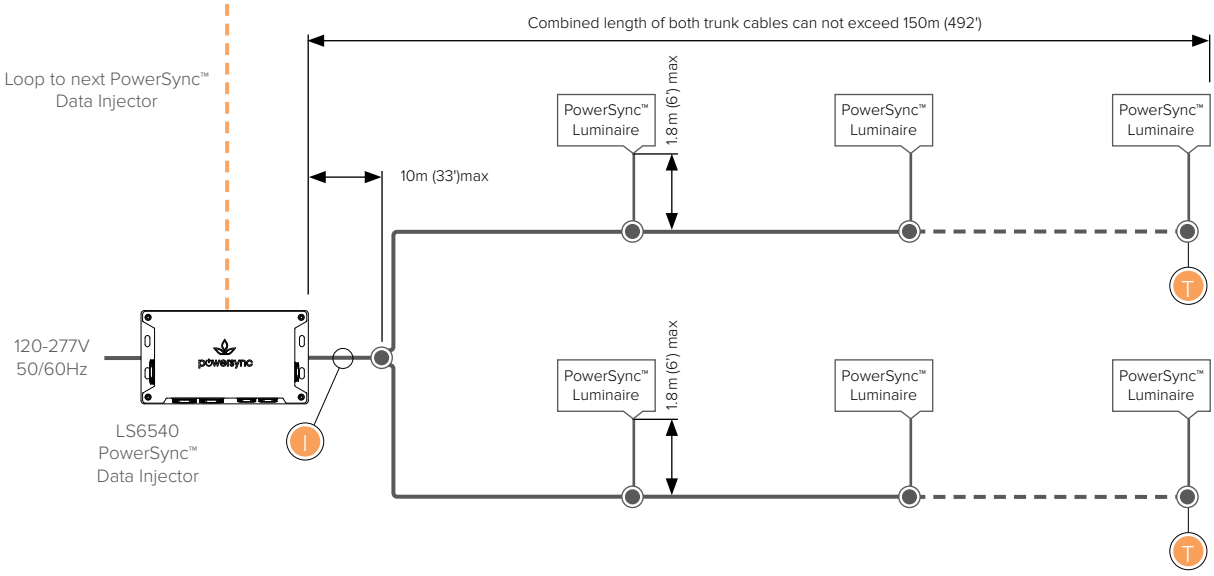

Up to 45 luminaires per run under the following conditions:

- Max total cable run length 150m (492') in up to two trunk cables
- Refer to 'Maximum Circuit Load' table for circuit limitations
- Always observe local electrical codes for branch circuit current limitations
- For run length in excess of 30m (100') use a wire size not lower than 14 AWG

Terminator

Use PowerSync™ terminator, supplied with leader cable to terminate last luminaire in chain.

Maximum Current

≤16.0A through LS6540 Data Injector.

Connection Type

Circuits can be configured as either connectorised or hardwired. For details consult installation instructions and comply with local electrical codes.

NOTE: The above diagrams are intended to show electrical pathways between luminaires and ancillary device. These diagrams are not intended to show type or colour of cord / wire, luminaire input voltage rating, wire gauge or approved use of the cord / wire supplied with luminaires.

Quadralux Q2 & Q4

Semanggi Overpass
Jakarta, Indonesia

The PowerSync™ LV Data Injector translates control signals into a digital format, delivering integral power and data to intelligent LED luminaires. This allows highly granular addressing and high-speed digital control of every luminaire, using only three wires. The Data Injector is DIN rail mountable, designed to be installed in a switchboard, next to the power supply and circuit breaker that is supplying power to the controlled lighting circuit. The PowerSync™ Data Injector accepts a growing list of standard protocols (0-10V, DMX / RDM), for simple integration with a wide selection of control systems using these industry standard protocols.

Electrical

Input Voltage	48V DC
Unit Power Consumption	<5W
Connected Current	16A max
Electrical Connections	- Low voltage input terminal block - PowerSync™ out terminal block - DMX in/out RJ45 sockets - PWM/0-10V control terminal block - USB data port

Control

Dimming Options	DMX/RDM, 0-10V

Physical

Construction Details	Extruded aluminum
Finish	Anodised black
Ambient Operating Temperatures	-40°F to 122°F (-40°C to 50°C)
Mounting	35mm DIN Rail
Weight	0.8kg (1.8lb)

Certification & Compliance

IP Rating	IP30
Approved Use	Low voltage lighting systems (Dry locations only)
Certifications	ETL, CE, RCM, CCC (Pending)

Pending

Dimensions - Side Mount

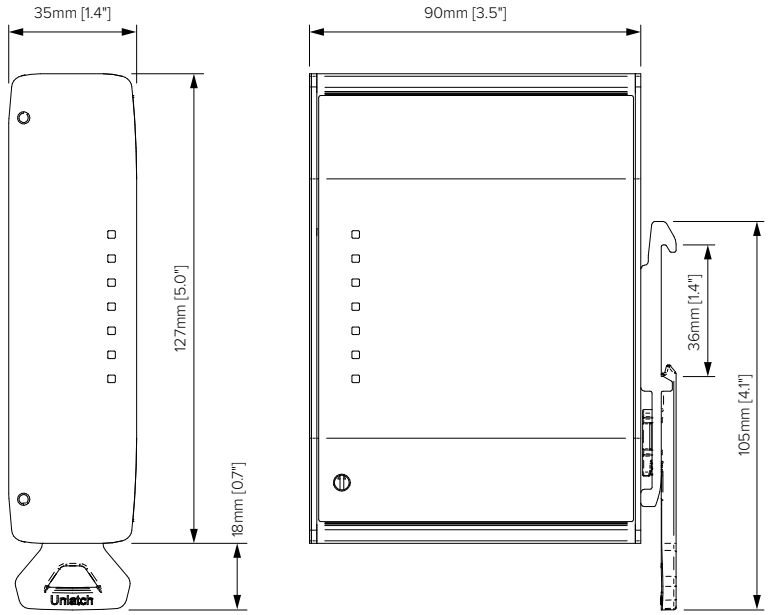

Dimensions - Front Mount

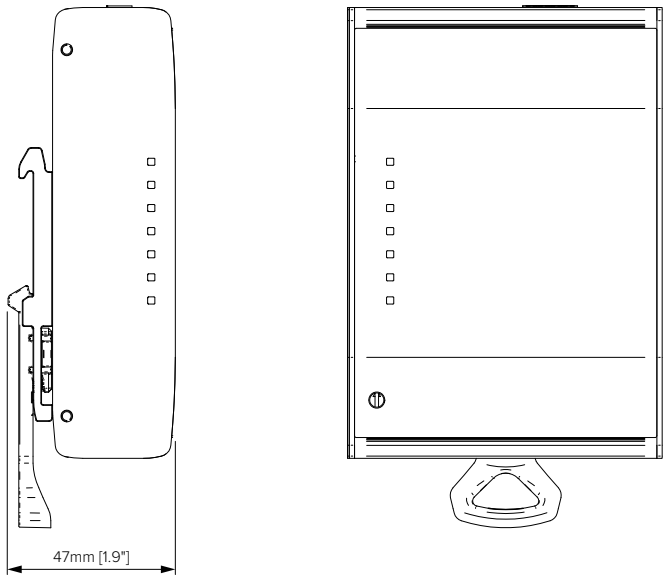

powersyncTM

Connectorised Accessories

Cables & Connectors (For Connection Type 77 Only)

Leader & Jumper Cables - International Market	Code
Leader Cable 10m (33')	LS6402C-033
Leader Cable specify custom length in feet - 30m (100') max.	LS6402C-xxx
Jumper Cable 0.3m (1') fixture gap spacing	LS6404C-001
Jumper Cable 0.6m (2') fixture gap spacing	LS6404C-002
Jumper Cable 1.2m (4') fixture gap spacing	LS6404C-004
Jumper Cable 3m (10') fixture gap spacing	LS6404C-010
Jumper Cable specify custom fixture gap spacing in feet - 30m (100') max.	LS6404C-xxx

Leader & Jumper Cables - North America Market	Code
Leader Cable 10m (33')	LS6402U-010
Leader Cable 9.75m (25')	LS6402U-025
Leader Cable 15m (50')	LS6402U-050
Leader Cable specify custom length in feet - 30m (100') max.	LS6402U-xxx
Jumper Cable 0.3m (1') fixture gap spacing	LS6404U-001
Jumper Cable 0.6m (2') fixture gap spacing	LS6404U-002
Jumper Cable 1.2m (4') fixture gap spacing	LS6404U-004
Jumper Cable 3m (10') fixture gap spacing	LS6404U-010
Jumper Cable specify custom fixture gap spacing in feet - 30m (100') max.	LS6404U-xxx

All connectorised options in North America are limited to 12.8 A branch circuit load.

Terminator	Code
Terminator for use in hardwired installations	LS6406
Terminator for use with connectorised luminaires	LS6417

Note: A terminator ships with every leader cable. Order separately for spare parts and split runs only.

Splitters	Code
Y - Connector	LS6245

Wire Colours & Designations

Mains Voltage - International Market

Designation	Colour
Active	Brown
Neutral	Blue
Earth	Green / Yellow
Data	Black

Mains Voltage - North American Market

Designation	Colour
Active	Black
Neutral	White
Earth	Green / Yellow
Data	Grey (or Red)

Low Voltage - International Market

Designation	Colour
Positive	Red
Negative	Black
Data	Grey / Black

Low Voltage - North American Market

Designation	Colour
Positive	Red
Negative	Black
Data	Grey / Black

DMX Pin Designations

	Connector Type		
Signal	3 Pin XLR	5 Pin XLR	RJ45 Std
Data +	3	3	1
Data -	2	2	2
Ground	1	1	7

RJ45

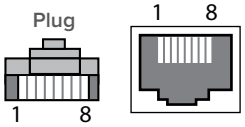

Pin 1

3-Pin XLR

Input

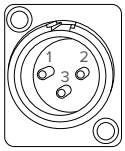

Output

5-Pin XLR

Input

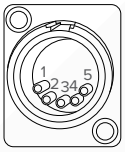

Output

Shipping Weights & Dimensions

Luminaire	Weight		Width		Length		Height	
	kg	lb	mm	in	mm	in	mm	in
LS9120	3.1	6.8	280	11.0	300	11.8	140	5.5
LS9140	4.1	8.8	280	11.0	420	16.5	140	5.5
LS9160	7.9	17.4	370	14.6	500	19.7	150	5.9
LS9180	14.1	31.1	440	17.3	660	26.0	150	5.9
LS9010 (1ft)	-	-	130	5.1	190	7.5	510	20.1
LS9010 (2ft)	-	-	130	5.1	190	7.5	700	27.6
LS9010 (3ft)	-	-	130	5.1	190	7.5	1000	39.4
LS9010 (4ft)	-	-	130	5.1	190	7.5	1300	51.2
LS9010 (5ft)	-	-	130	5.1	190	7.5	1600	63.0
LS9030 (1ft)	-	-	130	5.1	190	7.5	510	20.1
LS9030 (2ft)	-	-	130	5.1	190	7.5	700	27.6
LS9030 (3ft)	-	-	130	5.1	190	7.5	1000	39.4
LS9030 (4ft)	-	-	130	5.1	190	7.5	1300	51.2
LS9050 (1ft)	-	-	130	5.1	190	7.5	510	20.1
LS9050 (2ft)	-	-	130	5.1	190	7.5	700	27.6
LS9050 (3ft)	-	-	130	5.1	190	7.5	1000	39.4
LS9050 (4ft)	-	-	130	5.1	190	7.5	1300	51.2
LS9015 (1ft)	-	-	130	5.1	190	7.5	510	20.1
LS9015 (2ft)	-	-	130	5.1	190	7.5	700	27.6
LS9015 (3ft)	-	-	130	5.1	190	7.5	1000	39.4
LS9015 (4ft)	-	-	130	5.1	190	7.5	1300	51.2
LS9015 (5ft)	-	-	130	5.1	190	7.5	1600	63.0

Luminaire	Weight		Width		Length		Height	
	kg	lb	mm	in	mm	in	mm	in
LS9016 (1ft)	-	-	130	5.1	190	7.5	510	20.1
LS9016 (2ft)	-	-	130	5.1	190	7.5	700	27.6
LS9016 (3ft)	-	-	130	5.1	190	7.5	1000	39.4
LS9016 (4ft)	-	-	130	5.1	190	7.5	1300	51.2
LS9016 (5ft)	-	-	130	5.1	190	7.5	1600	63.0
LS9260	-	-	-	-	-	-	-	-
LS3150 (1ft)	4.1	9.0	140	5.5	190	7.5	500	19.7
LS3150 (2ft)	7.2	15.9	140	5.5	190	7.5	700	27.6
LS3150 (3ft)	10.4	22.9	140	5.5	190	7.5	1000	39.4
LS3150 (4ft)	13.4	29.5	140	5.5	190	7.5	1300	51.2
LS3040	7.0	15.4	220	8.7	220	8.7	380	15.0
LS3080	8.0	17.6	280	11.0	280	11.0	470	18.5
LS5030	8.0	17.6	295	11.6	580	22.8	105	4.1
LS5070	8.0	17.6	295	11.6	580	22.8	105	4.1
LS1010	2.7	5.9	190	7.5	190	7.5	300	11.8
LS2010	3.6	7.9	190	7.5	190	7.5	390	15.4
LS2020	3.4	7.4	190	7.5	190	7.5	390	15.4
LS6510	-	-	-	-	-	-	-	-
LS6520	-	-	-	-	-	-	-	-
LS6540	3.1	6.8	280	11.0	300	11.8	140	5.5
LS6550	-	-	-	-	-	-	-	-

For shipping weights and dimensions are not yet listed, please contact factory.

LUMASCAPE

Design. Create. Illuminate.

GLOBAL DISTRIBUTION NETWORK

ASIA PACIFIC

Brisbane Technology Park
18 Brandl Street
Eight Mile Plains, QLD 4113
Australia
Phone: +61 7 3854 5000
Fax: +61 7 3854 5001
E-mail: sales@lumascape.com

NORTH AMERICA

1300 Industrial Road, Unit #19
San Carlos, CA 94070
United States of America
Phone: +1 650 595 5862
Fax: +1 650 595 5820
E-mail: info@lumascape.com

LUMASCAPE MIDDLE EAST, NORTH AFRICA, INDIA & TURKEY

Dubai World Centre
Building Block C. Office #432
Dubai, United Arab Emirates
Phone: +971 887 9951
Fax: +971 887 9601
E-mail: sales@lumascapeme.ae

LUMASCAPE CHINA

20 West Building No 377 Wuyi Road
Wujin Hi-Tech Zone
Changzhou, Jiangsu, China
Phone: +86 519 8919 2555
Fax: +86 519 8919 1053
E-mail: chinasales@lumascape.com

FOLLOW US